DIESEL ENGINE

INSTALLATION MANUAL

OXE DIESEL

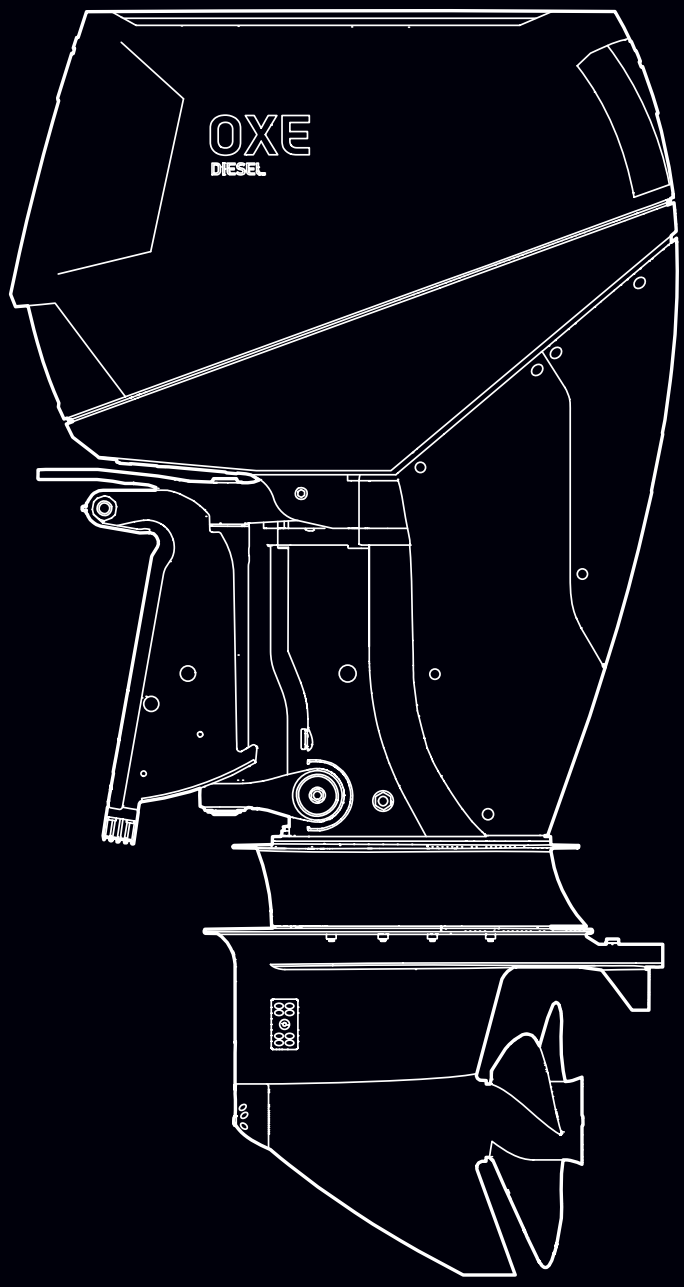

Publication No: ODM1003/E

PREFACE

ABOUT THIS MANUAL

This manual provides you with the information you need to install your 125/150/175/200 HP OXE diesel outboard.

When installing the OXE diesel outboard, it is recommended to have access to

- OXE diesel outboard Service Book
- OXE diesel outboard User's Manual
- Apliccable accessory manuals, such as a Control Head and Display Manual.

NOTE! Specifications and descriptions are subject to change without notice.

IMPORTANT!

Be sure to fill in the ***Commissioning Information Form*** at the rear of this manual to activate your warranty.

Send completed documents to your **local dealer.**

OXE Marine AB
Hortensiagatan 6
SE-256 68 Helsingborg, Sweden
+46 (0)431-371130
info@oxemarine.com

CONTENTS

WARNING SIGNS AND REGULATIONS

LEVELS OF WARNINGS

Important instructions which concern technical safety and protection of persons are emphasised as shown below.

WARNING

A warning indicates a hazardous situation which, if ignored, could result in death or serious injury.

DANGER

This refers to working and operating procedures which must be complied with in order to prevent damage to or destruction of material.

CAUTION

A caution indicates special precautions that must be taken to avoid damage to the products or other property.

NOTE! Explanatory descriptions which help in understanding the relevant work or operating procedure to be carried out.

REGULATIONS DESIGNED TO PREVENT ACCIDENTS

Prevent accidents with personal injury and damage to engine

- **Installation work may only be performed by authorized and skilled personnel.**
- **Keep area surrounding the outboard, ladders and stairways free from oil and grease. Accidents caused by slipping can have serious consequences.**
- **Persons must not stand under an engine suspended on a crane hook. Use certified lifting equipment and check for any damage.**
- **Wear close-fitting working clothes.**
- **Wear safety work clothes and footwear.**
- **During installation work, switch off the battery master switch.**
- **The engine may only be started and operated by authorized personnel.**

Prevent accidents with damage to engine

- Always use genuine OXE parts. Installation of “equally” good parts from other suppliers may cause severe damage for which the workshop carrying out the work is responsible.
- Use only OXE diesel-approved service products (fuel, engine oil, antifreeze and anti-corrosion agent).
  Pay attention to cleanliness. Diesel fuel must be free of water.

Prevent accidents with damage to the environment

Engine oil and filter elements/cartridges, fuel/fuel filter

- Dispose of used oil according to local environmental legislation.
- Take strict precautions to ensure that no oil or diesel fuel contaminate soil or drainages.

CAUTION

Risk of contamination of drinking water.

- Filter elements are classed as dangerous waste and must be treated as such.

Coolant

- Treat undiluted anti-corrosion agents and/or antifreeze as hazardous waste.
- When disposing of used coolant, the environmental legislation issued by the relevant local authorities must be adhered to.

Notes on safety in handling used engine oil

Prolonged or repeated contact between the skin and any kind of engine oil dries out and increases the risk of skin-related illnesses such as eczema. Common effects to the exposed skin are dry sensations, irritation and inflammation. Drying, irritation or inflammation of the skin may therefore occur. Used engine oil also contains hazardous substances that have caused skin cancer in tests on animals. If the basic principles of work safety and hygiene are followed, handling used engine oil does not represent a health hazard.

Precautionary measures to protect your health

- Avoid prolonged or repeated skin contact with used engine oil.
- Protect your skin by means of suitable agents (creams etc.) or wear protective gloves.
- Clean skin which has been in contact with engine oil.
  - Wash thoroughly with soap and water. A nail brush provides effective assistance here.
  - Special hand cleaning agents make it easier to clean dirty hands.
  - Do not use gasoline (petrol), diesel fuel, gas oil or solvents as washing agents.
- After washing apply a fatty skin cream to the skin.
- Change clothing and shoes that are soaked in oil.
- Do no put oily cloths in your pockets.

Ensure that used engine oil is disposed of in appropriate manner. Engine oil is a substance that endangers the water supply.

For this reason do not let engine oil get into the ground, waterways, the drains or the sewers. Violations of local environmental legislation are punishable by law.

Carefully collect and dispose of used engine oil. Information on collection points can be obtained from retailers, the supplier or the local authorities.

IMPORTANT INFORMATION

WARNING

The OXE diesel outboard is normally delivered without any fluids and has to be filled up before start-up. Use fluids of quality and volume listed in table below.

RECOMMENDED FLUIDS AND GREASE

		Quantity	
Fluid	Quality	Metric	US units
Fuel	EN 590 (with national environmental and cold weather standards) ASTM D 975 No. 1 and No. 2 JIS KK 2204 NATO Code F54 and F75	-	-
Engine oil	OXE Engine Oil or 5w-30 dexos2 API SM/CF GM-LL-A025/ B025 ACEA A3/B4 [2]	5.5 liters [1] [3] 7.0 liters [1] [4]	5.8 quarts [1] [3] 7.4 quarts [1] [4]
Gear box oil	OXE Gearbox Oil or Fully Synthetic Dual Clutch Transmission Fluid - DCT	2.0 liters [1]	2.1 quarts
Coolant	OXE Coolant or GM Long-Life Coolant - Specification B040 1065/Distilled water (min 30/70)	6.0 liters	6.3 quarts
Grease	OXE Grease or DIN 51502:KP2.5K-20 ISO 6743: ISO-L-XBCEB2.5	-	-
Power trim and tilt unit, PTT	OXE PTT Oil or ATF Dexron II	0.5-0.7 liters	0.52-0.73 quarts
Upper belt oil	OXE Belt Transmission Oil or Fully Synthetic Transmission Fluid - ATF / Dexron HP	0.33 liters	0.34 quarts
Lower belt oil	OXE Belt Transmission Oil or Fully Synthetic Transmission Fluid - ATF / Dexron HP	2 liters	2.1 quarts

[1] Refer to ***Workshop Manual***
[2] For cold climate, select viscosity according to table ***Oil Viscosity***.
[3] Volumes for engines 125 and 150 HP
[4] Volumes for engines 175 and 200 HP

NOTE! The fuel must meet national and international standards.

NOTE! Only use fuels, lubricants etc. in accordance with OXE Marine AB regulations. Otherwise the manufacturer's liability for defects will not apply!

Also refer to ***User's manual*** and ***Workshop Manual***, section ***Recommended Fluids and grease***.

DIESEL FUEL

The composition of the fuel is vital for operation of the OXE diesel engine, its service life, and emissions. To meet the performance specified and to run the boat cleanly and quietly, it is important that fuel as recommended in table ***Recommended fluids and grease*** is used.

If national emission regulations permit, OXE diesel engines can be operated on commercially available diesel fuels with less than 0.05% sulfur content.

Fuel sulfur content	≤0.05% (≤500 ppm)	>0.05% - 0.5% (>500-5000 ppm[2])
Engine oil change intervals	200 h or one year	100 h or one year [1]

[1] If the sulfur content is higher than 0.05%, the intervals between engine oil changes should be halved or determined by frequent oil sampling.
[2] If the sulfur content is higher than 0.1% an engine lubrication oil with suitable TBN shall be used.

NOTE! Do not use fuel with more than 0.5% sulphur content!
Using fuel with high sulfur content will increase the OXE diesel engine's emission levels and cause excessive wear and shorter life time.

Large differences in composition occur in local fuel specification. This can result in higher fuel comsumption, higher emissions and less power output.

ENGINE OIL VISCOSITY

Select viscosity according to diagram below.

The temperature values refer to stable ambient temperatures.

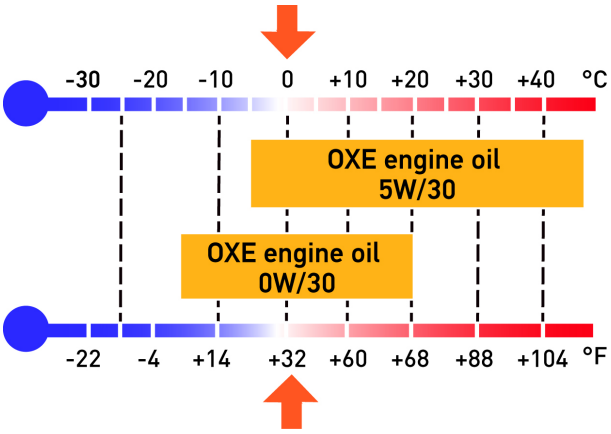

AVOIDING FUEL FLOW RESTRICTIONS

WARNING

Adding additional components to the fuel supply system such as filters, valves, fittings, etc. may restrict the fuel flow. This could cause engine stalling at low speed, and/or a lean fuel condition at high RPM, that could cause engine damage.

TECHNICAL DATA

Application	Specification	
	Metric	US units
Engine type	Diesel, L4	
Displacement	1956 cc	122 cu in
Intake	VGT turbocharged, intercooled	
Max. power at engine speed 4100 RPM	92/110/129/147 kW	125/150/175/200 HP
Max. engine torque at engine speed at 2500 rpm	376/380/380/415 Nm	510/515/515/563 lb ft
Fuel	Diesel	
Dry weight	350 kg	772 lbs
Wet weight	358 kg	789 lbs
Alternator output	130 A	
Rig length	25" or 33"	
Cooling	Closed cooling circuit, heat exchanger/seawater	
Starting	Electric	
Shift	Electro-hydraulic	
Clutch	Hydraulic multi-friction plate	
Gear ratios	High speed - 1.73:1 High speed torque - 2.17:1	
Dimensions, L x H x W 25" leg 33" leg	 994 x 1880 x 678 mm 994 x 2083 x 678 mm	 39 x 74 x 27 in 39 x 82 x 27 in

SELECTING ACCESSORIES FOR THE OXE OUTBOARD

Genuine OXE Marine parts and accessories have been specifically designed and tested for OXE outboards.

Some accessories, not manufactured or sold by OXE Marine, may not be designed to be safely used with OXE outboards or OXE outboard operating system. Acquire and read the Installation, Operation, Maintenance and Accessories manuals for all selected accessories.

UNPACKING INSTRUCTIONS

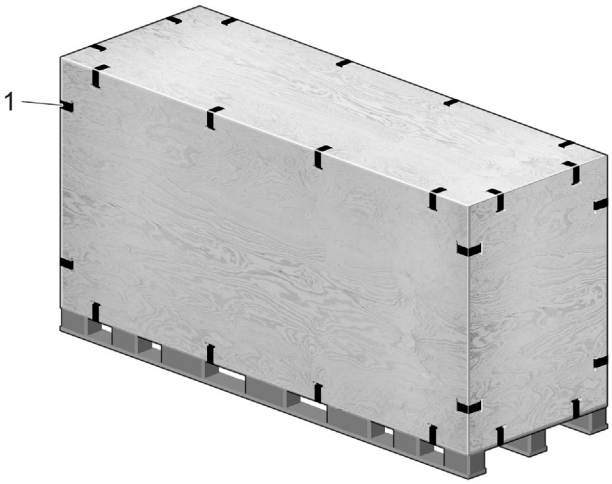

1. Move the OXE outboard box by means of a pallet/forklift truck.

CAUTION

Follow instructions on the OXE outboard box.

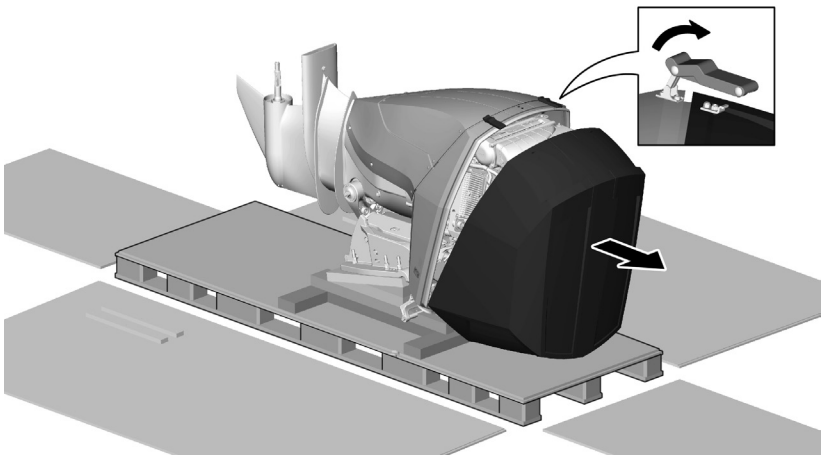

2. Remove the lid and side parts from the pallet.

3. Remove and take care of the box containing installation accessories.

CAUTION

Do not damage the outboard surface.

4. Remove the OXE outboard top cowling.

5. Remove and take care of the document folder placed on the right side of the engine.

NOTE! These documents shall be delivered with the OXE outboard and always passed on to the next owner!

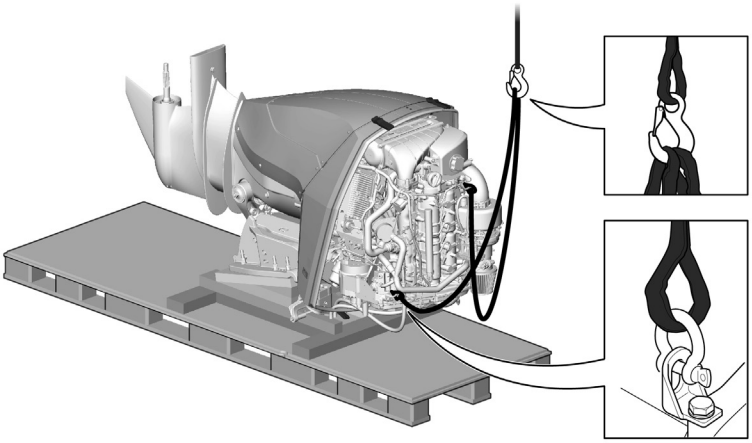

DANGER

Do not unbolt the OXE outboard from the pallet.

6. Mount shackles and lifting straps, certified according to weight, to the lifting eyes.

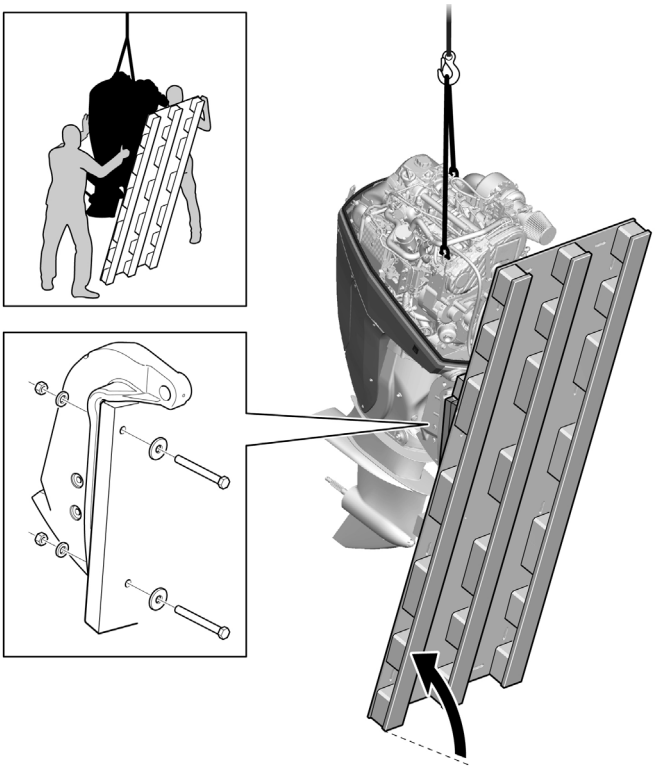

DANGER

Do not remove the OXE outboard from the pallet before lifting operation.

CAUTION

This is a two person operation.

7. Slowly lift the OXE outboard and pallet into upright position.

CAUTION

Do not damage the paint coat of the transom unit.

8. Remove screws, spacers and nuts carefully.

CAUTION

This is a two person operation.

9. Carefully remove the pallet from outboard. Hold the outboard in order to keep it from swinging.

ACCESSORY BOX CONTENT

Part number	Description	QTY	Reference	Kit
30-0114-444	**Pump, External Fuel pump**	**1**	**Refer to Installation Manual, Fuel system.**	External fuel pump kit
• 30-0114-458	• Fuel pump bracket	1	Refer to Installation Manual, Fuel system.	
• 30-0116-132	• Harness for External Fuel Pump	1	Refer to Installation Manual, Electrical components.	
• 30-0122-254	• Connector for fuel hose	2	Refer to Installation Manual.	
• 30-0122-049	• Hose clamp	2	For the external pump	
• 30-0121-052	• Copper washer	2	Used in installation with 30-0122-254.	
• 30-0130-270	• Nut M6, Nylock	1	Used with 30-0114-458.	
• 30-0130-191	• Washer M6	1	Used with 30-0114-458.	
• 30-0130-292	• Bolt M6 x 40	1	Used with 30-0114-458.	
30-0190-006	**Prefilter Fuel Assembly**	**1**	**Refer to Installation Manual.**	Fuel prefilter kit
• 30-0122-280	• Rubber p-clip M6x16x20 W5	2	Refer to Installation Manual.	
• 30-0130-041	• Bolt M8x20	1	Used with 30-0122-280 in installation.	
• 30-0130-192	• Washer 8.4 x16 M8	1	Used with 30-0122-280 in installation.	
• 30-0122-049	• Hose clamp	2	Refer to Installation Manual	
• 30-0114-462	• Fuel feed hose 5M	1	Refer to Installation Manual	
• 30-0114-464	• Fuel return hose 5M	1	Refer to Installation Manual	
• 30-0114-497	• ¼" UF to 10mm hose connector	2	Refer to Installation Manual	
30-0140-032	Man overboard switch, kill cord	1	Set as normally closed.	
30-0122-246	Cable tie	10	Used for installation on Fuel hose	
30-0190-011	Loctite 542	1	Used to seal and secure fitting when installing to the external prefilter, external fuel pump.	
30-0140-100	Rigging sleeve (hose) incl. flange	1	Refer to Installation Manual.	
Doc. kit	**Documents and servicebook kit**	**1**		Doc. kit
• 30-0160-036	• Drill template	1	Refer to Installation Manual.	
• 30-0160-033	• Acessory box, Content list	1		
• ODM1006	• Service Book	1		

INSTALLATION DIMENSIONS

When mounting the OXE outboard, ensure there is clearance for the engine moving from port to starboard as well as during trim and tilt operations.

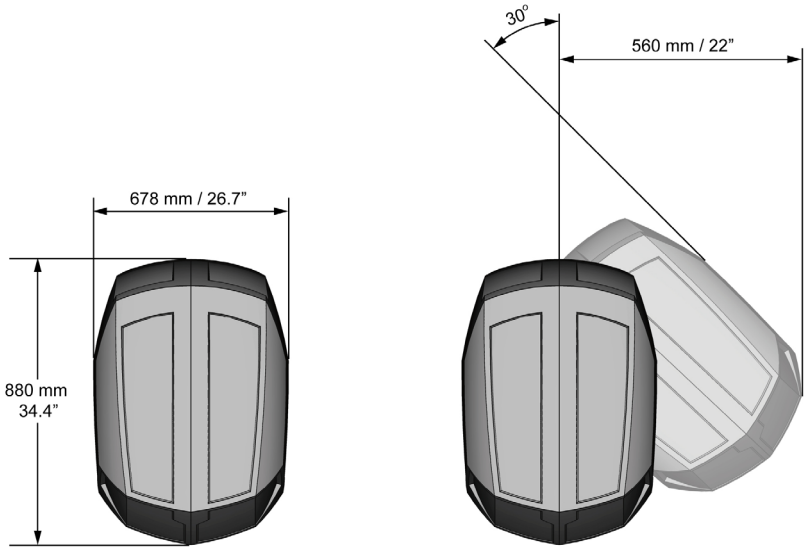

Fig. 1 *Clearance needed for the OXE outboard moving from port to starboard*

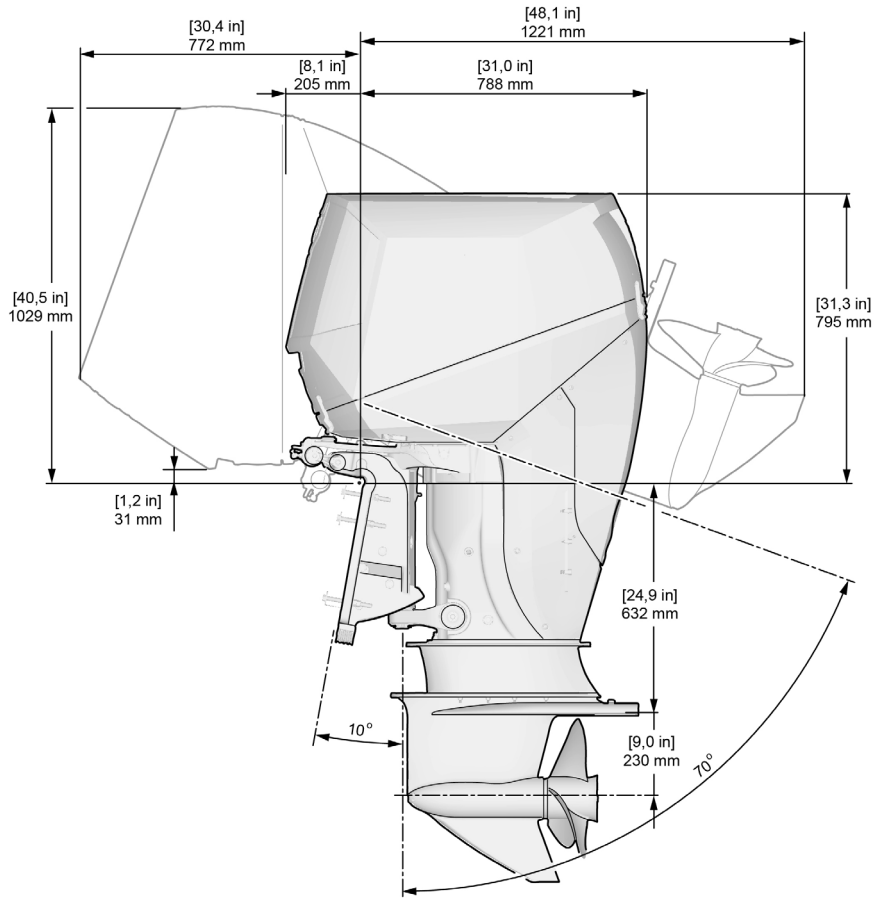

Fig. 2 *Clearance needed for the OXE outboard trim and tilt operation - rig 25”*

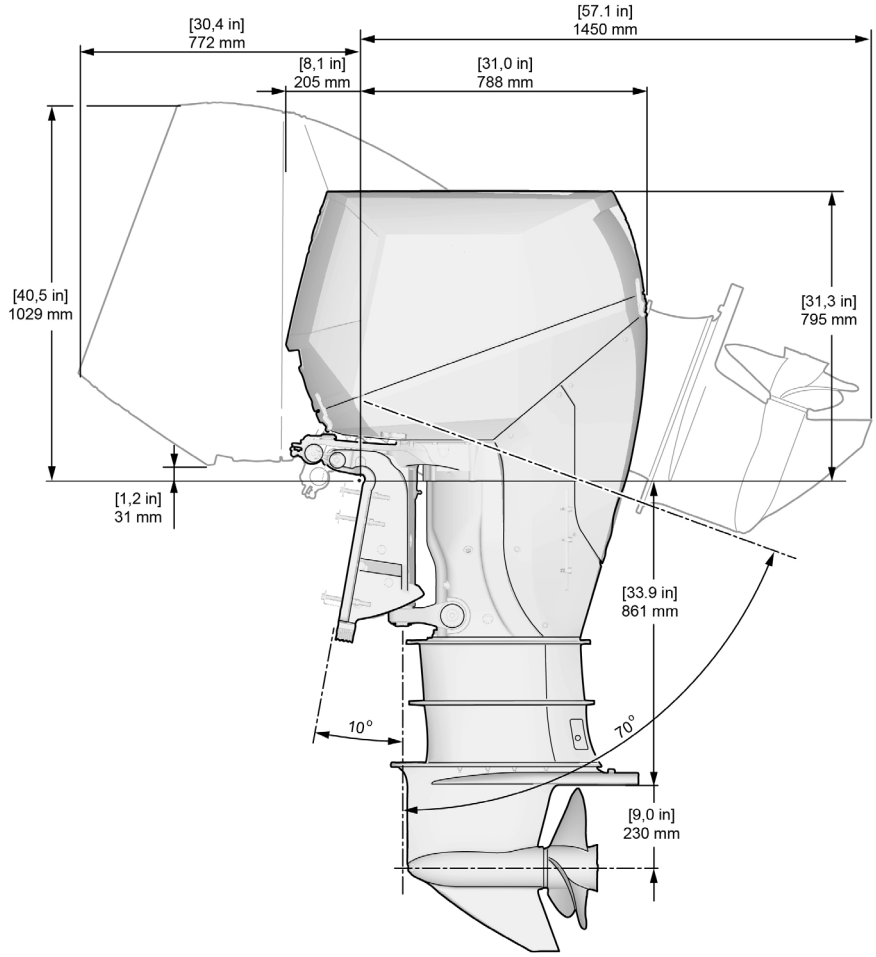

Fig. 3 *Clearance needed for OXE outboard trim and tilt operation - rig 33"*

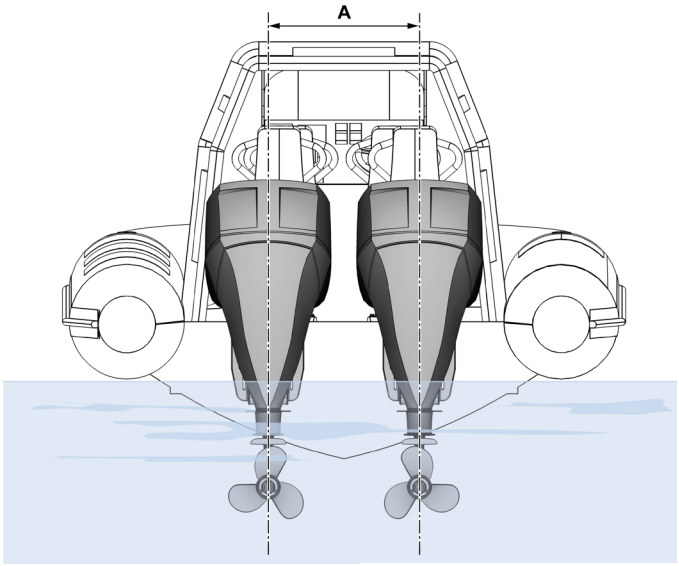

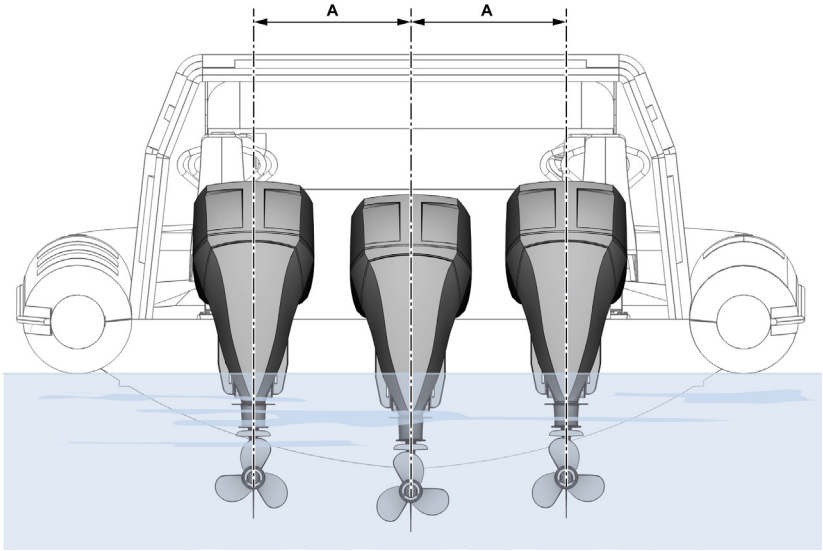

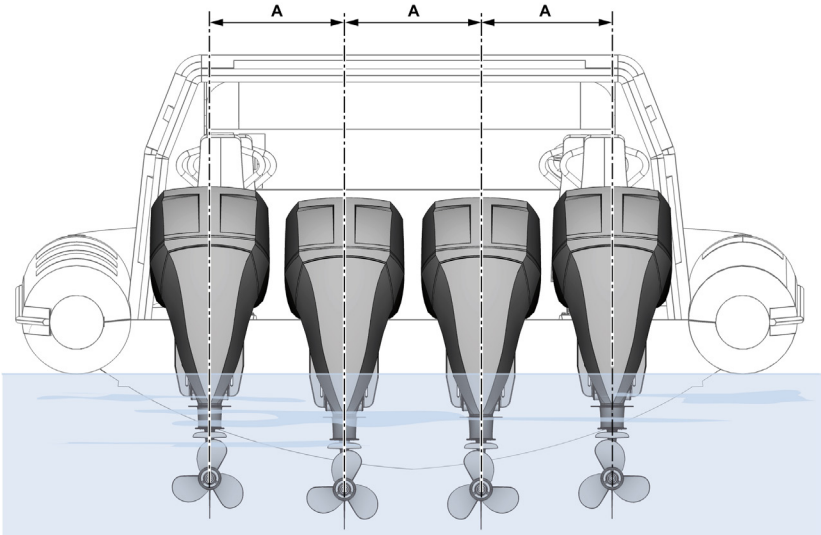

	Min clearence between outboard centerline CL	cm	inch
A	Twin/Triple/Quad	81.3	32

MOUNTING THE OXE OUTBOARD

WARNING

Overpowering a boat may cause severe instability. Never install an outboard that exceeds the maximum boat horsepower rating capacity. Always check with your dealer!

Improper mounting of the OXE outboard could result in hazardous conditions, such as poor handling, loss of control or fire hazards. Only authorized personnel should mount the OXE outboard.

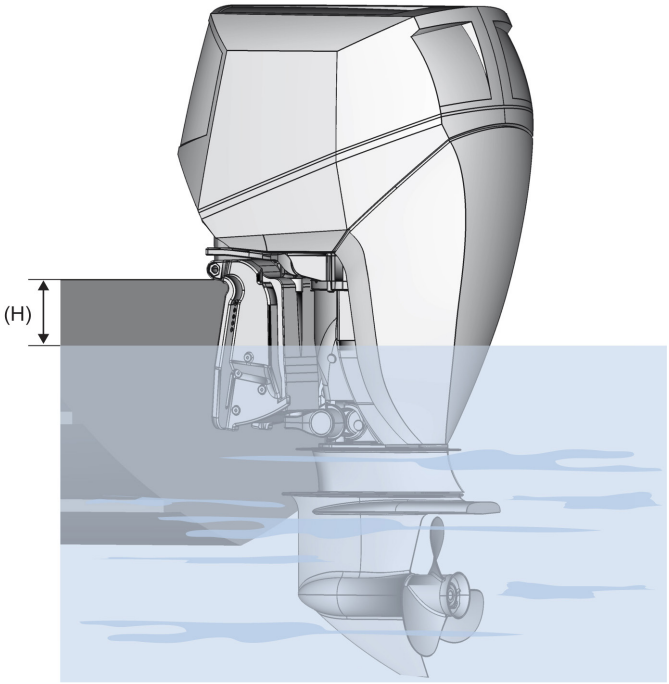

Fig. 4 *Oxe outboard mounting height (H)*

Minimum height between water surface and transom bracket seating point		
Model	**Min. height (H)**	
OXE Diesel 125/150/175/200 HP	150 mm	5.9 in

Maintain the minimum allowable height (H), shown in the illustration, between the water surface and the clamp bracket seating point while the vessel is still and fully loaded. Remember to check and adjust the height if you change center gravity (CG) or increase maximum boat load.

GENERAL APPLICATION

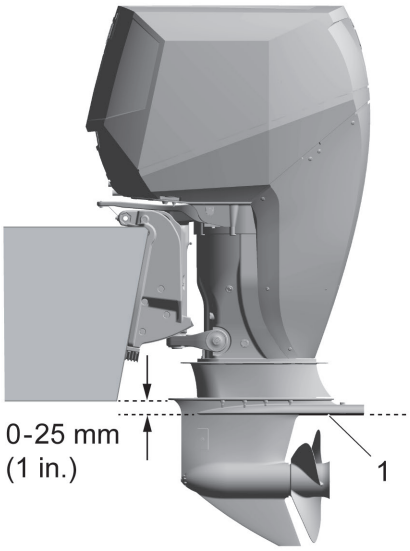

Fig. 5 *OXE outboard mounting height, general application*

1. Adjust the OXE outboard height so that the anti-cavitation plate ***(1)*** is aligned with, or lowered, within ***25 mm (1 in.)***, the boat transom bottom.

HIGH SPEED APPLICATION

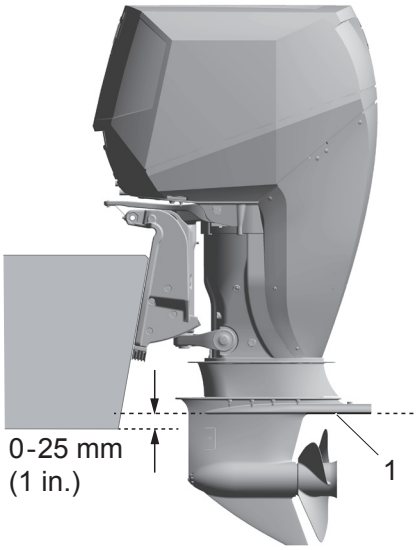

Fig. 6 *OXE outboard mounting height, high speed application*

For high speed applications, a higher mounting position, approx 25 mm (1 in.) above the boat transom bottom, which might provide better performance.

In comparison to other manufactures equivalent outboard engines, take note that the OXE is one more inch in between the prop shaft and the cavitation plate to accommodate for a larger diameter propeller.

INSTALLING TRANSOM MOUNT

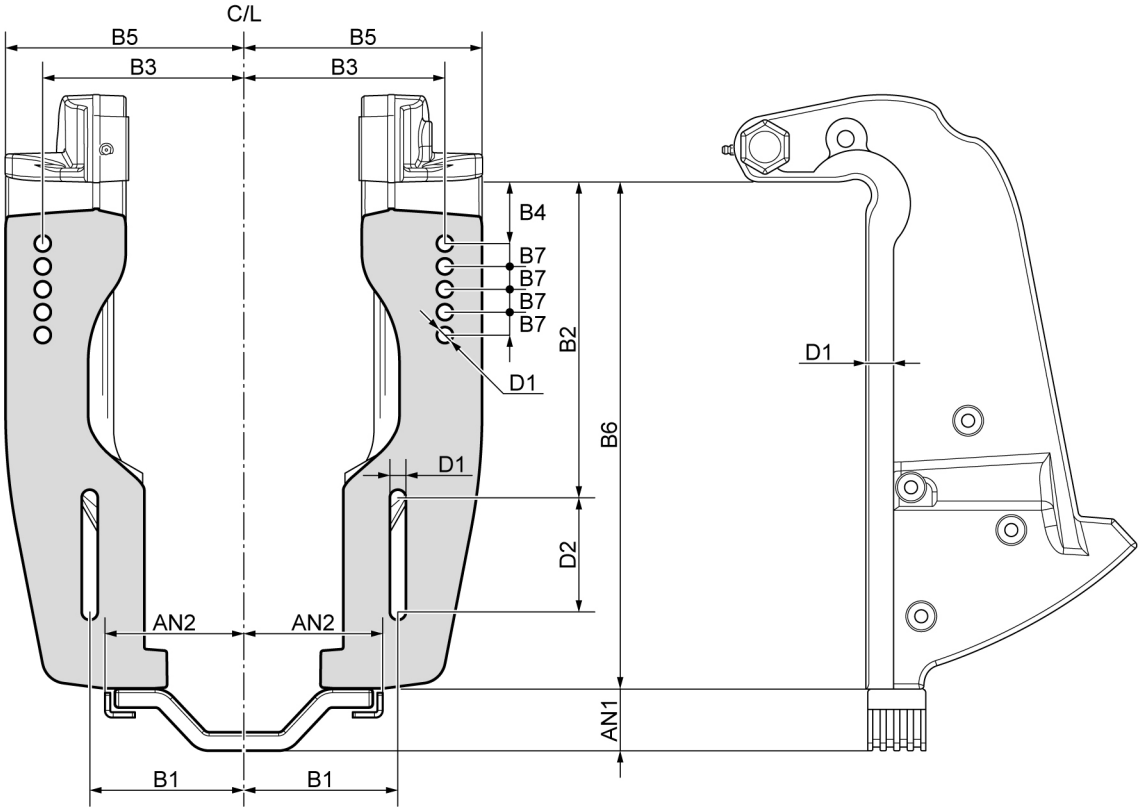

Fig. 7 *Transom mount, measurements and bolt pattern.* **NOTE!** Do not use as a template!

Symbol	mm (in.)	Symbol	mm (in.)	Symbol	mm (in.)	Symbol	mm (in.)
B1	125.4 (4.9)	B5	180 (7.1)	D1	20 (0.79)	AN1	52 (2.0)
B2	254 (10.0)	B6	411 (16.2)	D2	55.5 (2.2)	AN2	102 (4.0)
B3	163.5 (6.4)	B7	18.5 (0.7)				
B4	50.8 (2.0)						

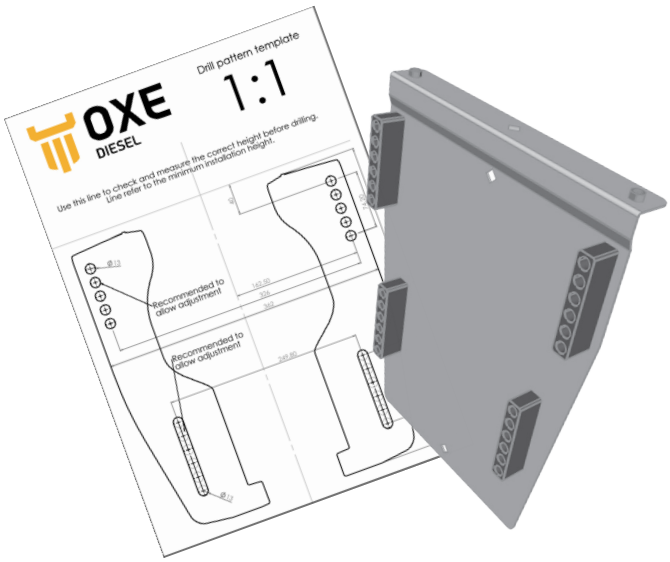

OXE outbord drilling template *Heavy-duty fixture*

NOTE! For an accurate result, use the enclosed OXE outbord drilling template when installing the transom mount. A heavy-duty fixture is available to order from your local dealer.

Determining boat transom vertical centerline (C/L)

Take the measurements a, b, c and d. Measurements a and b should be equal and so should measurements c and d.

NOTE! Recheck the measurements and verify that the transom vertical centerline position is straight!

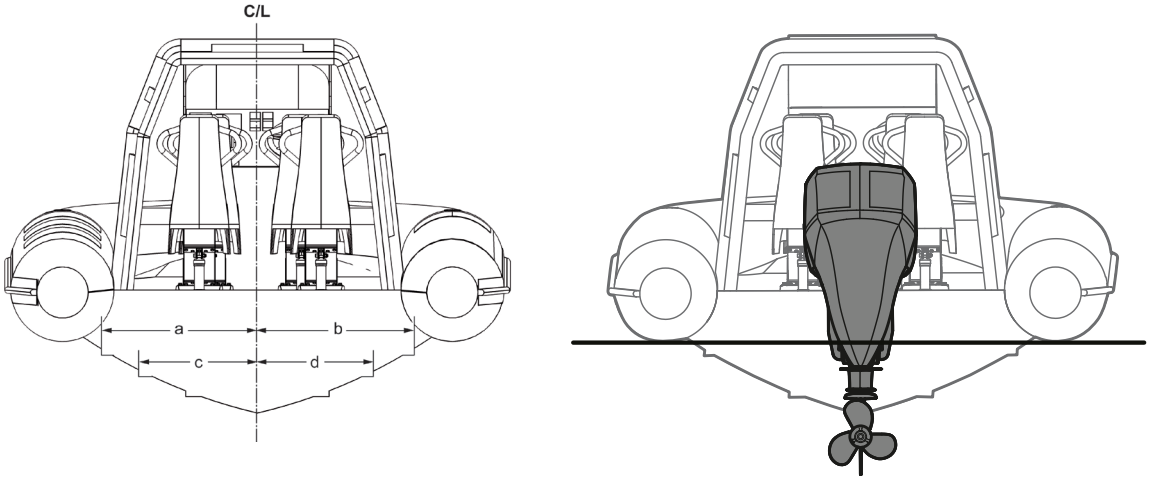

Fig. 8 *Centerline measurements*

OXE outboard twin installation

Mount both OXE outboards so that the distance of each outboard centerline to the transom centerline are equal on both sides, i.e. measurements (e) and (f) should be the equal. Ensure to maintain a minimum distance (a) between both vertical centerlines of the OXE outboards.

CAUTION

- **Ensure that distance e and f are equal.**
- **T1 must be equal to e plus f and no less than the minimum distance A, *refer to Installation Specifications*. Check dimensions.**

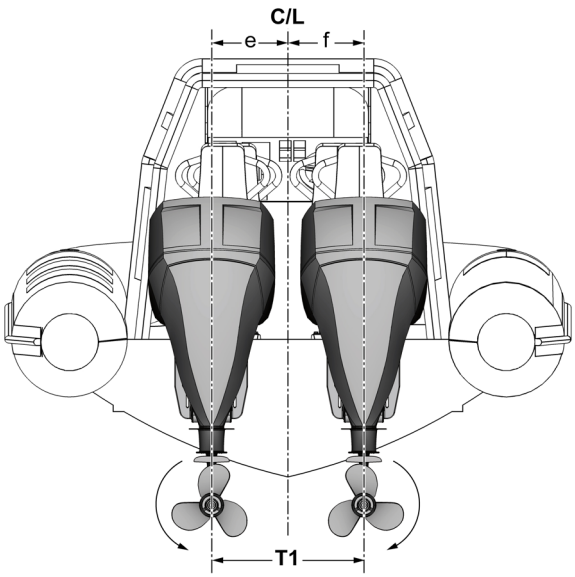

Fig. 9 *Transom centerline - dual installation*

OXE outboard triple installation

Set outboards as shown in figure below. The center outboard should be equipped with a longer rig than the outer OXE outboards.

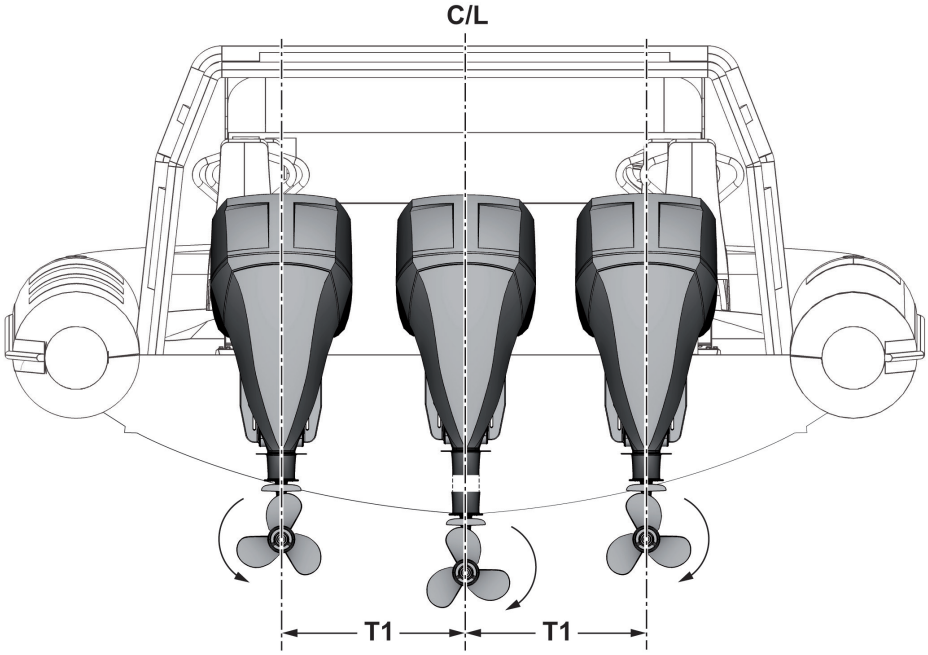

Fig. 10 *Transom centerline - triple installation*

OXE outboard quad installation

Set outboards as shown in figure below. The center outboards should be equipped with a longer rig than the outer OXE outboards.

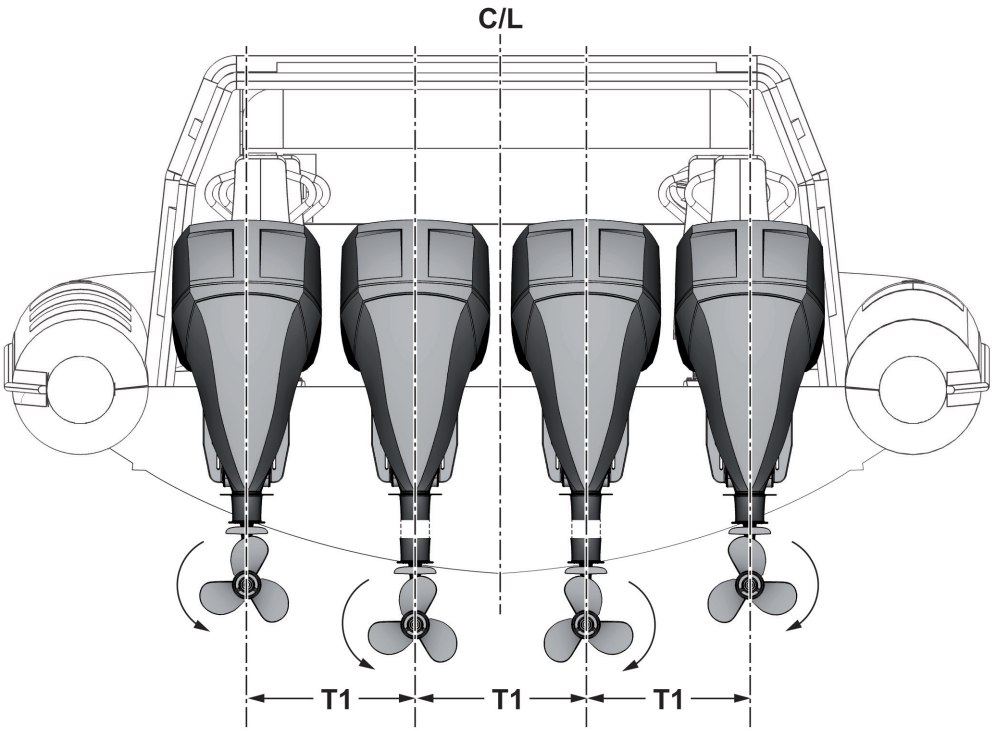

Fig. 11 *Transom centerline - quad installation*

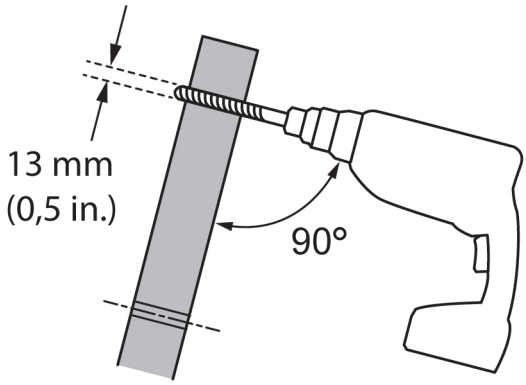

1. After determining the transom mount position, mark the preferrable mount hole positions on the boat transom. Drill mount holes, 13 mm (0.5 in) perpendicular to boat transom.

NOTE! Use OXE installation bolts or equivalent, 10.9 grade.

NOTE! During sea trailing, 4 bolts (2 on each side) are required. When one ultimate height has been established, install a a totall of 6 bolts. 2 upper and 1 lower on each side.
Apply marine sealer to the shanks of the bolts, not the threads! Secure the outboard with supplied mounting hardware.

WARNING

No free play is allowed between transom surface and clamp bracket. The clamp bracket or transom could break.

2. Apply marine sealer to the mounting holes and under the washers.

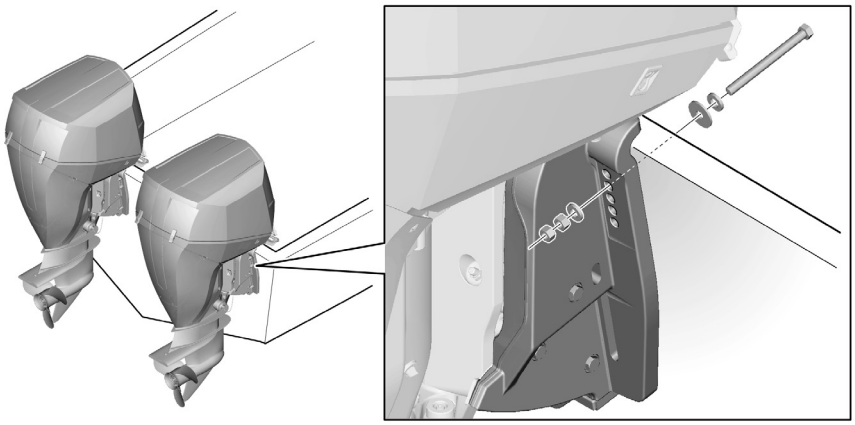

3. Tighten mounting bolts at a suitable torque suited for the transom material. First tighten the inner nut, followed by the outer nut. The outer nut will act as a locknut.

STEERING

The following diagrams illustrate different types of steering. Consult your engine/boat supplier, when selecting steering appliance for best engine/boat performance.

ELECTRO STEERING WITHOUT JOYSTICK

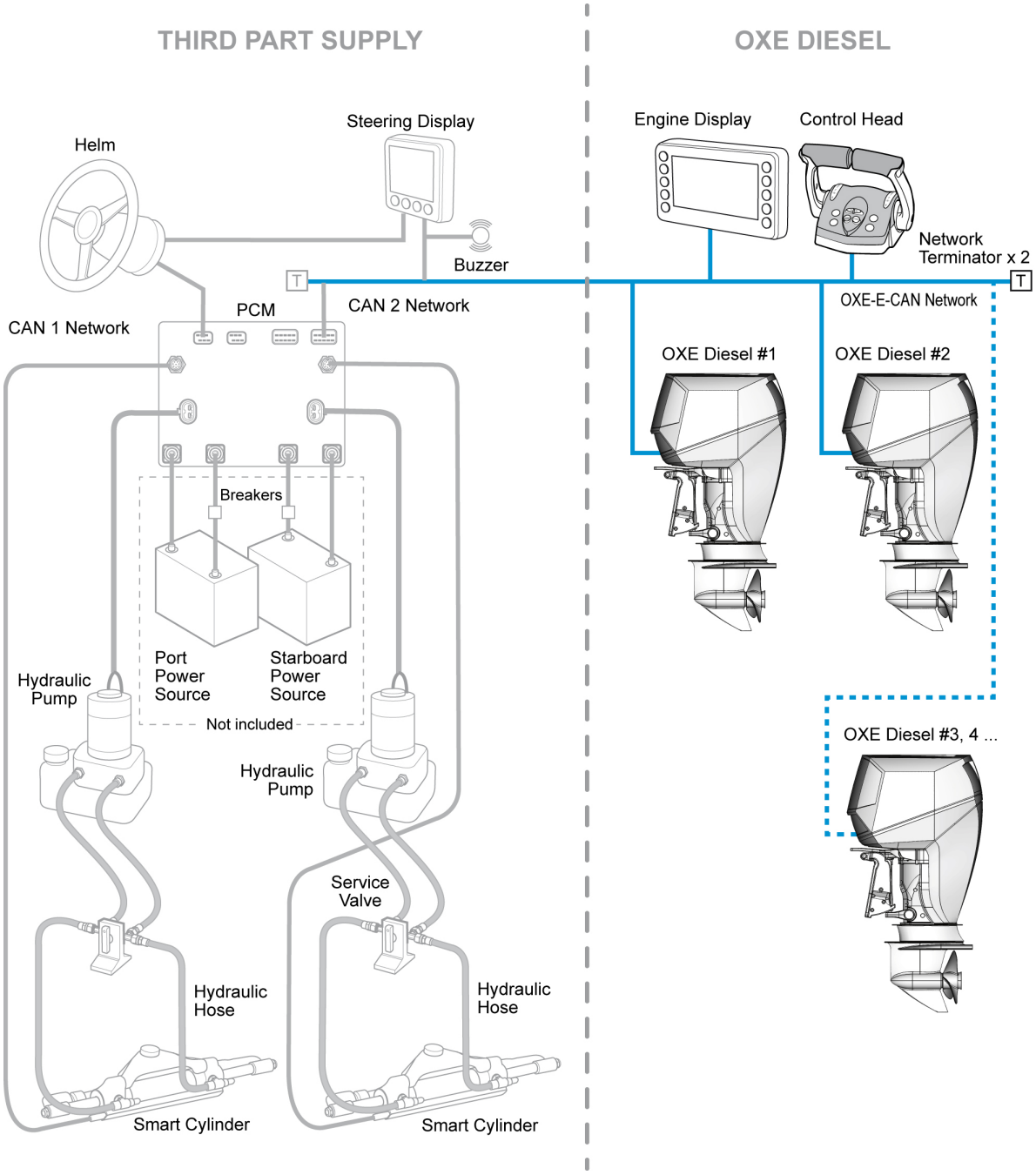

ELECTRO STEERING WITH JOYSTICK

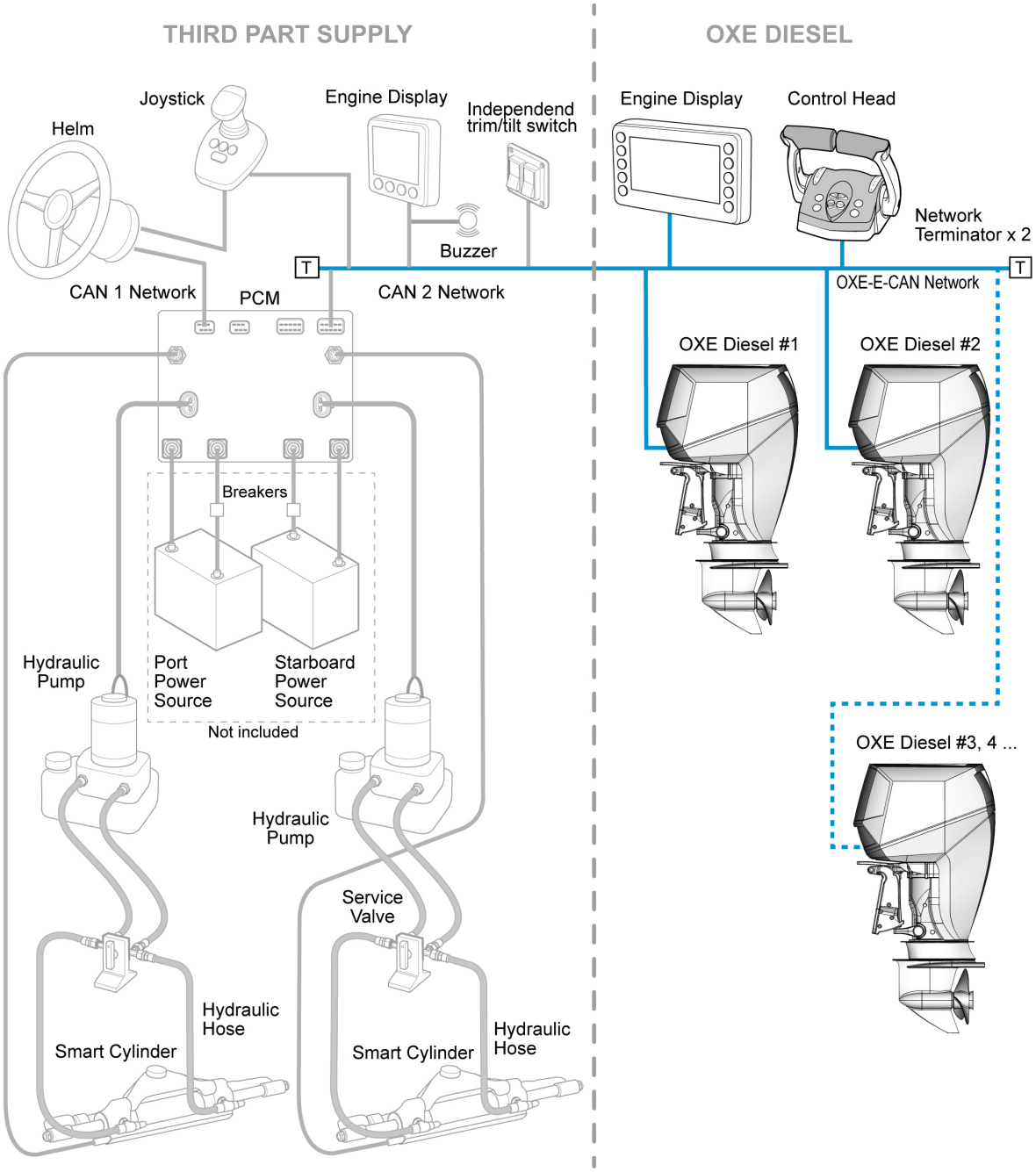

POWER STEERING

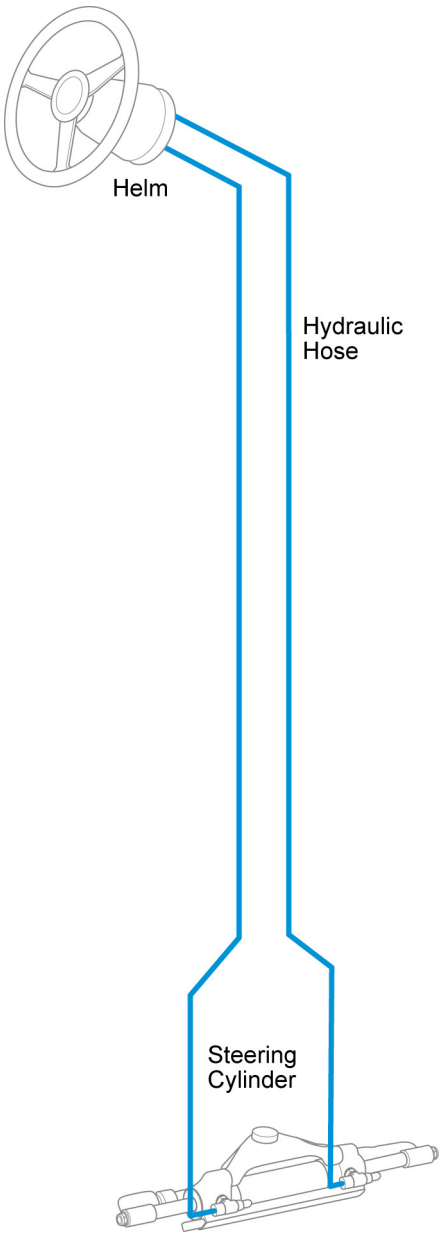

POWER STEERING SERVO-ASSISTED

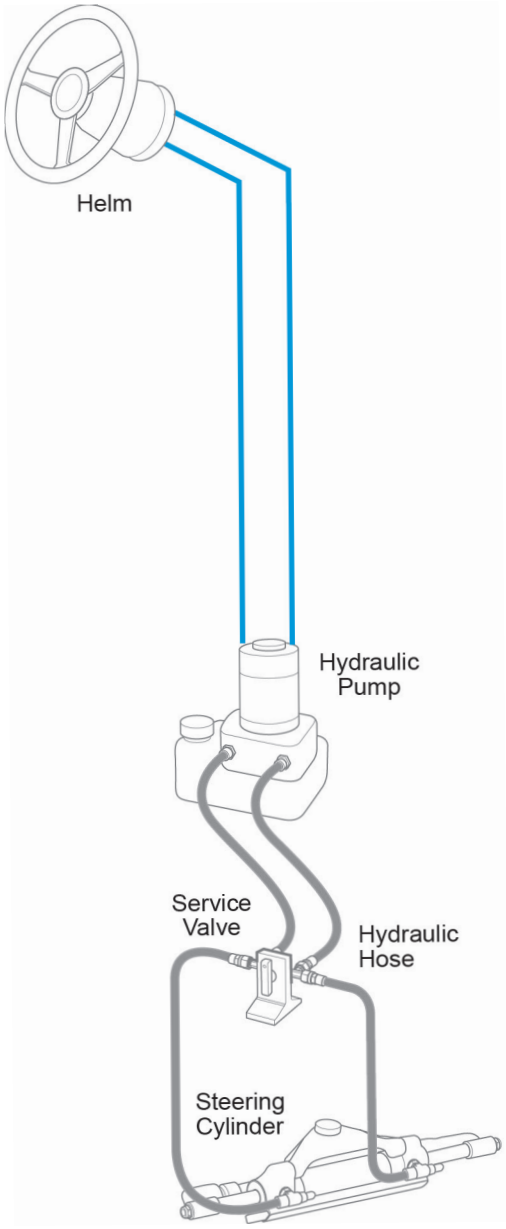

STEERING CYLINDER IN SINGLE ENGINE APPLICATION

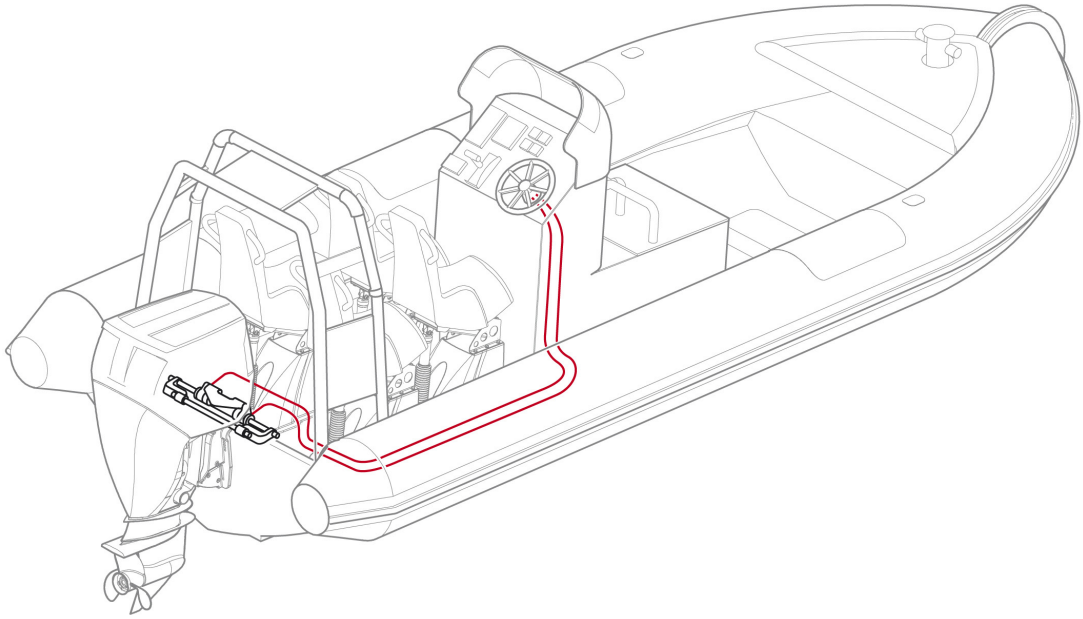

STEERING CYLINDER AND TIE BAR IN TWIN ENGINE APPLICATION

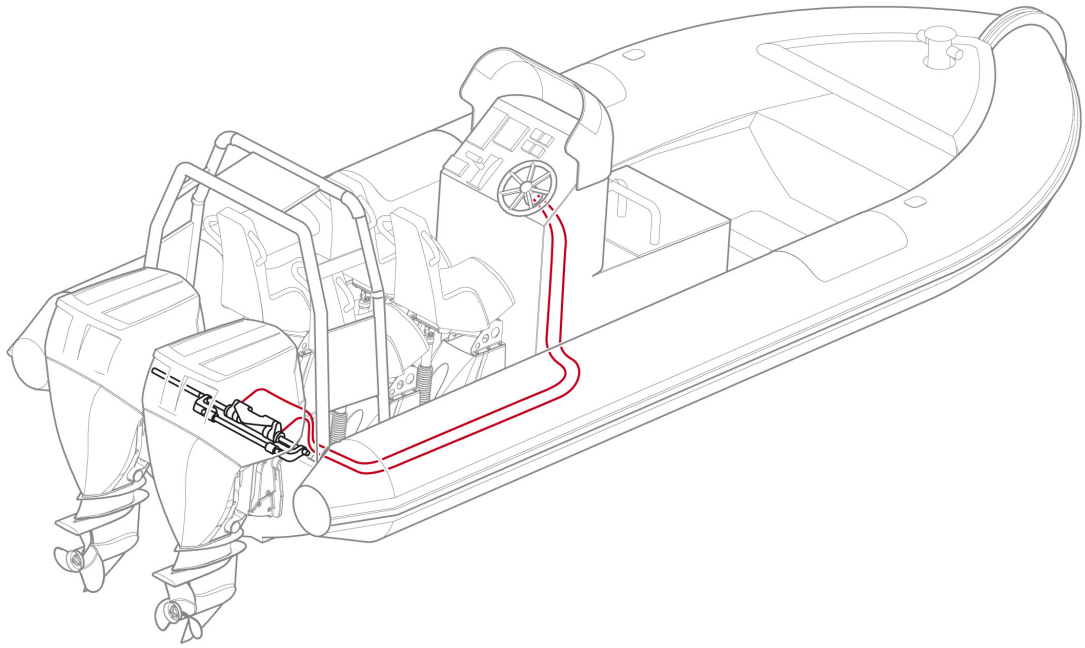

TWO STEERING CYLINDERS AND ONE TIE BAR IN TRIPLE ENGINE APPLICATION

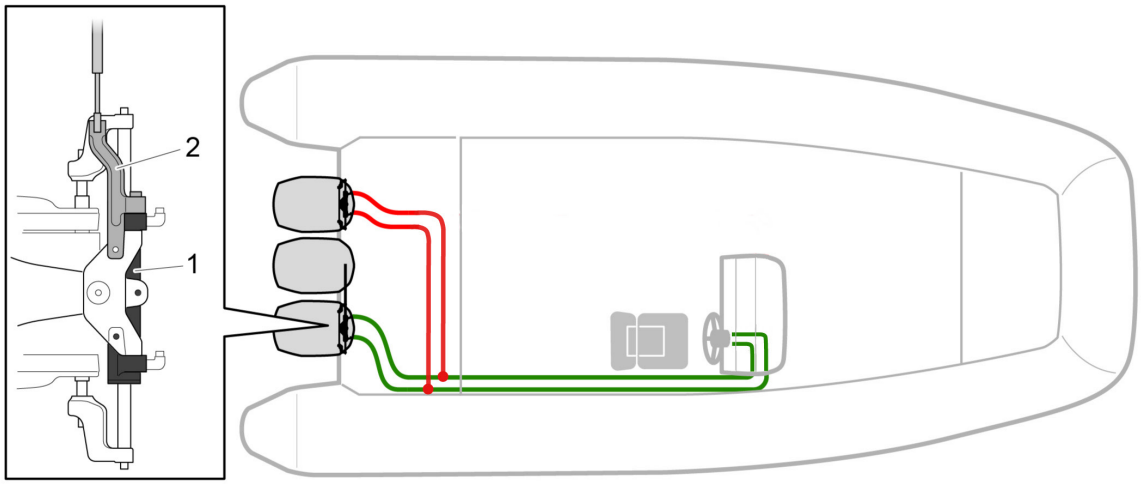

1. *Steering cylinder*
2. *Tie bar*

TWO STEERING CYLINDERS AND TWO TIE BARS IN QUAD ENGINE APPLICATION

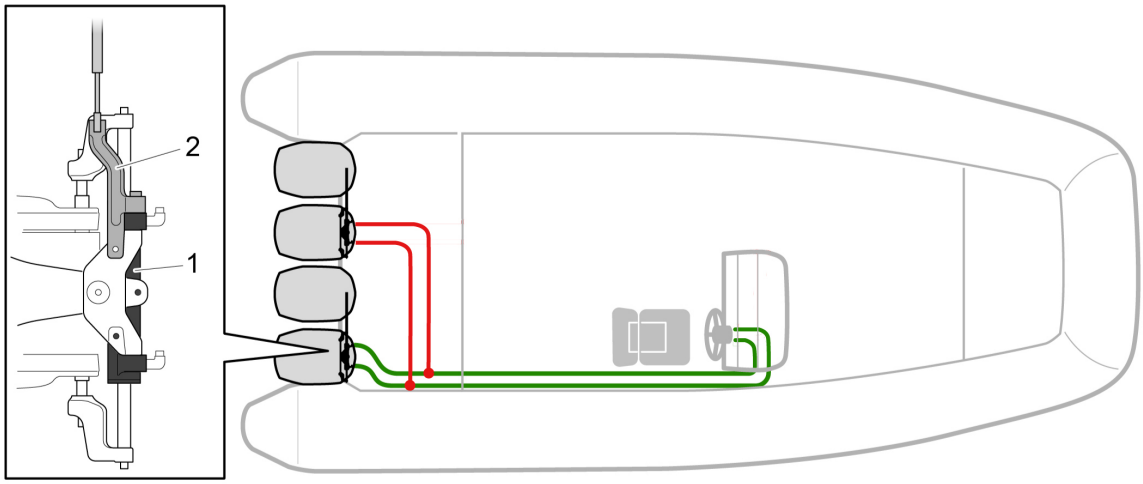

1. Steering cylinder
2. Tie bar

OXE OUTBOARD ALIGNMENT, TOE-IN AND TOE-OUT POSITION

In order to achieve a parallel installation of two, or more, outboards, the distance ***A*** between the propeller shafts and the distance ***B*** between centerlines of the water inlet or steering arm bolt holes have to be the same.

If an outboard toe-in position is required, the distance ***A*** should be somewhat longer than ***B***.

If an outboard toe-out position is required, the distance ***A*** should be shorter than ***B***.

The difference between toe-in and toe-out position is normally just about an inch.

NOTE! We recommend a parallel mount of the engines in order to achieve optimum performance of interaction between engine and boat. For further information, please contact your propeller and/or boat supplier.

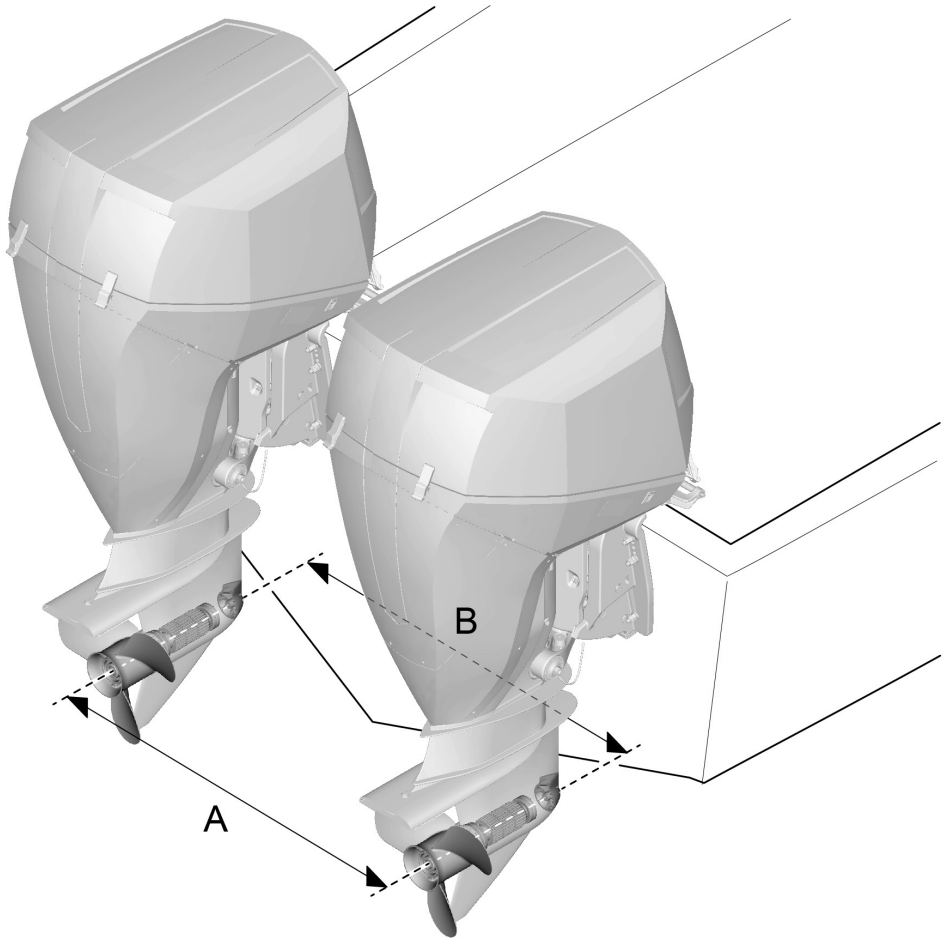

FUEL SYSTEM

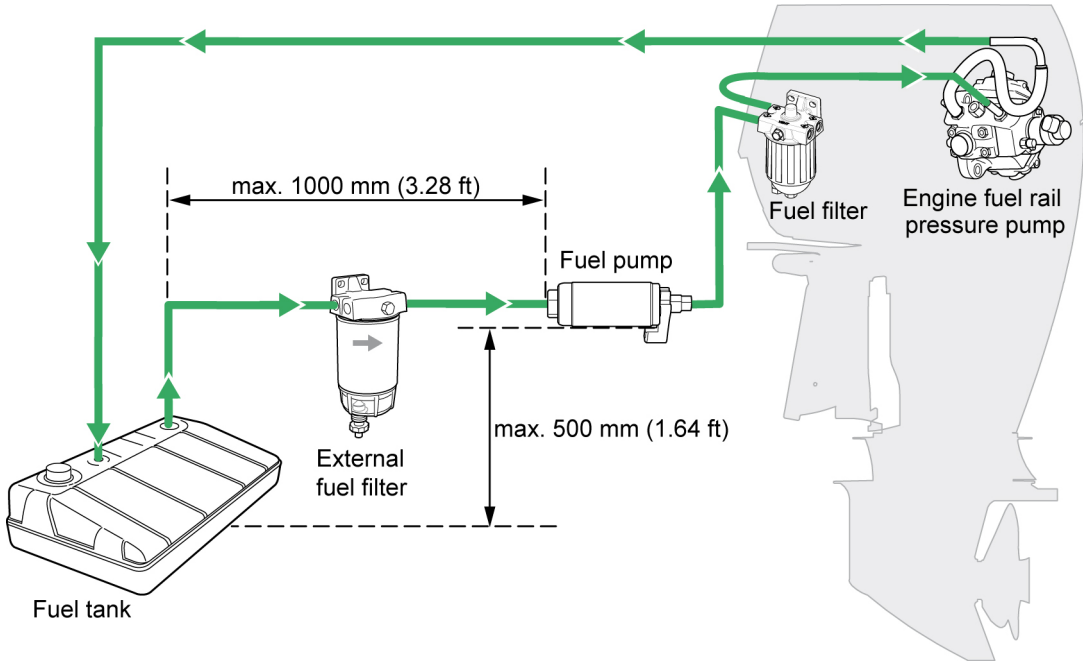

Fuel system dimensions		Metric	US units
Fuel line	Quality	Certified diesel resistant	
	Inner diameter	10 mm	0.39 in
	Length between tank and pump	max. 1000 mm	39.37 in
	Feed hose, length	5 m	16 ft 4.85 in
	Return hose, length	5 m	16 ft 4.85 in
Fuel pump	Mounting height above tank	500 mm	19.68 in
Fuel tank	Volume	min. 100 l	26.42 gallon

The fuel enters the engine via the pre-fuel filter and external fuel pump.

The mechanical fuel injection pump output is controlled by the Engine Control Unit (ECU), and provides fuel at the pressure required by the fuel injectors. The fuel injectors supply fuel directly to the combustion chambers of the engine.

The mechanical fuel injection pump, fuel rail pressure, fuel injection timing, and injection duration are all controlled by the ECU.

Fuel pre-filter

The 30-micron fuel filter is equipped with a water separator and installed after the fuel tank, on the suction side of the fuel system, between the fuel tank and the electrical fuel feed pump. An optional water-in-fuel sensor is available and can be ordered separately.

External fuel feed pump

The electrical fuel feed pump is mounted outside the fuel tank and is operated by the engine's ECU. The electrical pump motor pushes fuel from fuel tank to the engine through fuel lines.

NOTE! Use only OXE supplied electrical harness and electrical fuel feed pump.

Engine fuel filter

The fuel filter is a dual function fuel filter water separator with a cartridge-type filter suited for diesel engines equipped with high pressure injection systems. An optional water-in-fuel sensor is available and can be ordered separately.

Fuel rail high-pressure pump

The fuel rail pressure pump is a mechanical high pressure pump. Fuel is pumped to to the fuel rail at a specific pressure. Fuel pressure is regulated by the fuel pressure regulator, which is controlled by the Engine Control Unit (ECU) and returned through the return fuel line.

Fuel rail assembly

The fuel rail assembly attaches to the cylinder head. The fuel rail distributes pressurized fuel to the fuel injectors through the fuel lines.

Fuel tank

The minimum fuel tank volume must be 100 liters to prevent heating of the fuel.

Fuel rail sensor

The fuel rail pressure sensor gives the ECU an indication of fuel pressure. The ECU uses this information to regulate fuel pressure, by commanding the fuel pressure regulator open or closed on the inlet of the fuel injection pump.

Fuel injectors

A fuel injector is a solenoid device, controlled by the ECU, that injects pressurized fuel to each engine cylinder. Fuel from the injector tip is sprayed directly into the combustion chamber on the compression stroke of the engine.

The control functions for the fuel injection system are integrated in the ECU.

Quick-connect fitting

Quick-connect fittings provide a simplified means of installing and connecting fuel system components. The fittings consist of a unique female connector and a compatible male pipe end. O-rings, located inside the female connector, provide the seal. Integral locking tabs inside the female connector hold the fittings together.

Fuel pipe O-rings

O-rings seal the connections in the fuel system. Fuel system O-ring seals are made of a special material. Service the O-rings seals with the correct service parts.

INSTALLING FUEL LINES

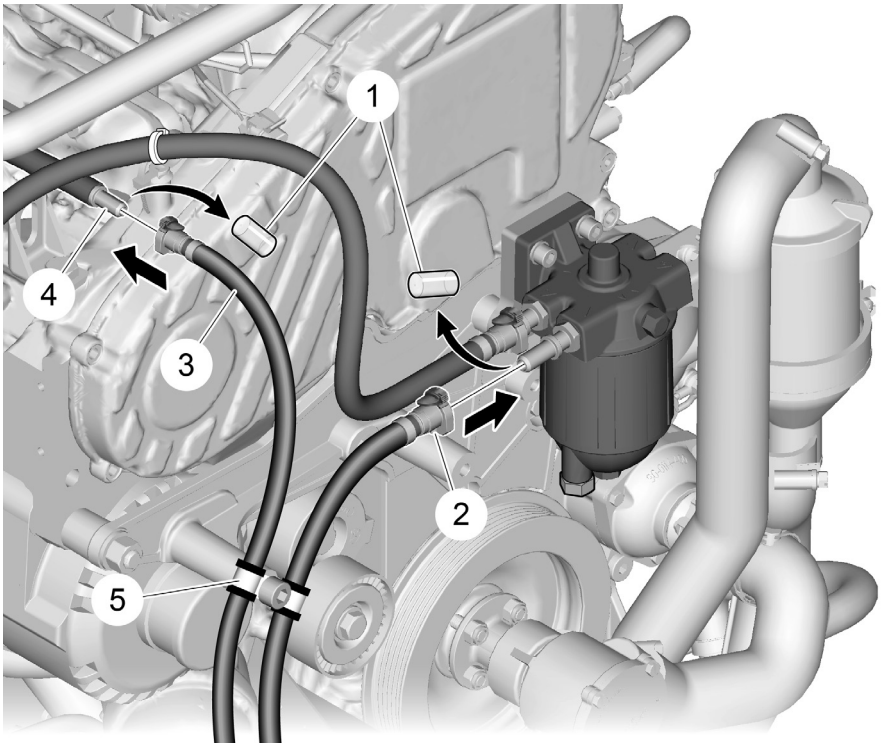

1. Remove transport protector cap ***(1)***.
2. Fit the fuel supply line with quick connector and hose clamp supplied ***(2)*** and connect to the fuel filter connectors male pipe end.
3. Fit the fuel return line quick connector and hose clamp supplied ***(3)*** to the male pipe end ***(4)***.
4. Fit the fuel lines ***(3)*** and ***(2)*** to the engine with supplied rubber clip ***(5)***.

   WARNING

   Keep the fuel lines clear from moving parts!

5. Lead the fuel lines through the right middle cowling outlet into the boat.

BLEEDING THE FUEL SYSTEM

NOTE! In order for the diesel fuel system to work properly, the fuel lines must be full of fuel and free from air. It is necessary to bleed/evacuate the air from the system before operating the outboard.

Evacuating air from the fuel system

1. Turn the ignition key **ON**. The fuel pump will run for 20 seconds.

   NOTE! Do not turn the ignition key to **START**. This could damage the fuel rail pressure pump.

2. Turn ignition ***OFF*** and wait 15 seconds. Repeat this cycle 3 times.

Air could enter the fuel system in any of the following ways:

- The outboard has just been installed.
- The engine ran out of fuel.
- The fuel lines have been damaged and or leaking joints.
- The fuel filter was removed for service or replacement.
- The fuel lines were removed or disconnected for servicing.
- The fuel lines are poorly connected.
- The fuel pump was removed for servicing.
- The fuel filter water drain cock was opened while the engine was running.

If one or more of the above occures, and air has entered the fuel system, you will need to bleed/evacuate the air from the system as described above, prior to operating the OXE outboard. Depending on the fuel system setup it may in some cases be harder to bleed and you may need to follow a special procedure to bleed the final air out which is described below.

WARNING

This is only allowed to be done once during the break-in procedure and should be done with caution by authorized personnel only.

If the fault codes SPN102 and SPN173 appear on the display during the initial seatrail you should perform the procedure below.

If fault codes ***SPN102 Fmi 0*** and ***SPN173 Fmi 0*** appear on the display proceed as follows:

3. Throttle down to Idle and stay there for approx. 1 minute.
4. Turn the engine off and leave the engine off for approx 1 minute.
5. Turn ignition on and make sure fault codes are not present.
6. Start the engine and let it sit at idle for 1-2 minutes.

   WARNING!

   Operate in a safe manor at your own risk!

7. Do a WOT run for 1-3 minutes at full load.

NOTE! For fault code list, refer to ***User Manual***.

PROPELLER AND GEAR RATIO SELECTION

SELECTING THE CORRECT GEAR RATIO AND PROPELLER FOR YOUR APPLICATION

Choosing the right propeller is the single most important decision you can make to get the best performance from your OXE outboard engine. Propeller choice can affect boat top speed by as much as 5 to 10 knots. It also has a direct effect on acceleration, cornering, pulling power, and fuel economy.

An improper propeller choice can significantly affect the performance of your boat and could result in damage to the outboard engine.

The OXE diesel engine, in comparison to a gasoline outboard engine, delivers a lot more torque at the propeller shaft and therefor makes it possible to select a larger propeller blade surface area to deliver torque and maximise performance.

UPPER (PRIMARY) BELT HOUSING

The upper (primary) belt housing is a unique feature of the OXE Diesel. It functions as a quick interchangeable gearbox. The clever design makes it easy for end users to change gear ratios at the dock or at the shoreline. By turning the upper belt housing180 degrees, the end user can change the gear ratio between 1:73 to 2:17, adapting the vessel for heavy or light applications.

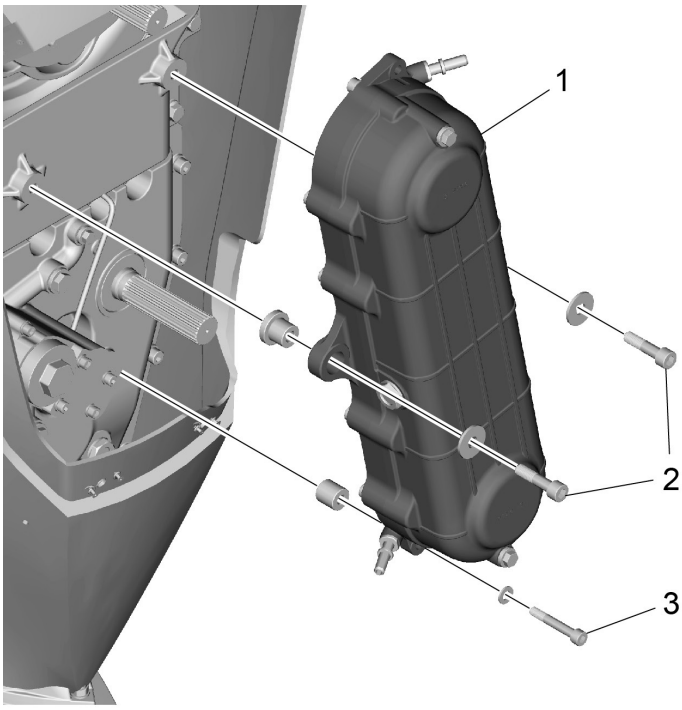

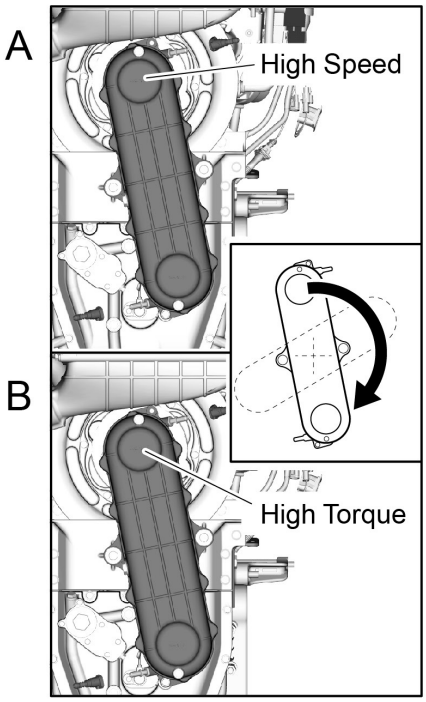

A: High Speed ratio 1.73:1. – Suitable for medium/high speed applications

B: High Torque ratio 2.17:1 – Suitable for slower heavier applications

1. Disconnect coolant hoses from the upper belt housing and remove bolts 1 - 3.
2. Turn the upper belt housing 180° and remount.

NOTE! Refer to ***Workshop Manual*** for correct installation procedure of the upper belt housing.

NUMBER OF PROPELLER BLADES

In general, 3 blade propellers offer good all-around performance and are suitable for high speed.

4 or 5 blade propellers are in general faster to plane and more efficient at cruising speeds but lack the top end speed of a 3 blade propeller. 4 or 5 blade propellers may also function better with heavier applications.

Propeller rotation

OXE outboards are delivered right hand rotation as standard. To move the boat forward, the propeller rotates in a right-hand (clockwise) direction as viewed from the rear.

DIAMETER AND PITCH

Diameter

The diameter is the distance across the imaginary circle that is made when the propeller rotates.

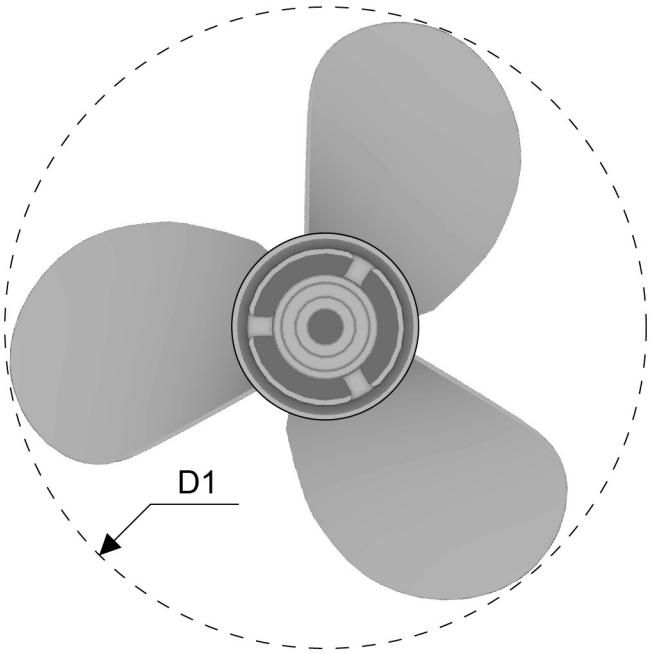

In comparison to other manufactures equivalent outboard engines, take note that the OXE has a larger distance between the prop shaft and the cavitation plate to accommodate up to a 17" diameter propeller.

Pitch

Pitch is the theoretical distance a propeller will travel in one complete revolution. For example, a 21 ″ propeller would ideally move 21 inches forward with each revolution. In practice, the actual distance travelled is less than the pitch because of “slip” which is necessary to produce thrust.

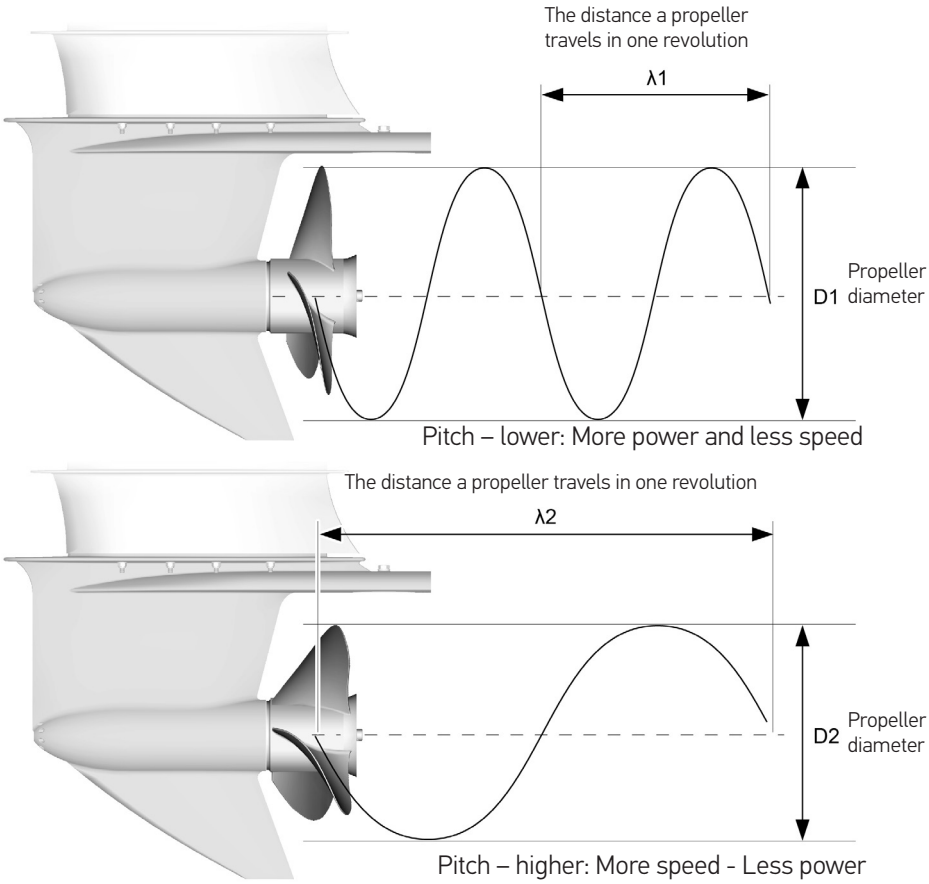

PROPELLER SLIPPAGE

Slippage depends on vessel weight, number of engines, propeller surface area and number of blades.

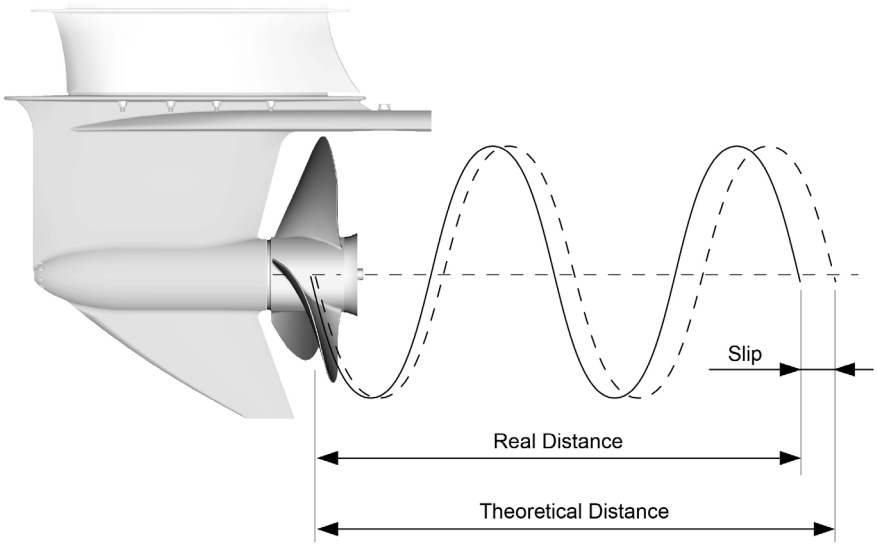

Slip examples

Light weight high speed vessel average 10-15% slip. Using 15.5 – 16″ diameter propellers.

Heavy medium speed vessel 3-3.5 ton per engine 10-20% slip. Using 15.5 – 17″ diameter propellers.

PROPELLER TESTING AND OPTIMISATION

Choose a propeller for your boating application that will allow the engine to operate within the specified full throttle operating range. When operating the boat at full throttle under normal load conditions, the engine RPM should be in the upper half of the recommended full throttle RPM range. Refer to ***Specifications***. If engine RPM is above that range, select a propeller of increased pitch in order to reduce engine RPM. If engine RPM is below the recommended range, select a propeller of reduced pitch to increase engine RPM.

A target of 4,200 rpm +/- 100 rpm at W.O.T during full loaded conditions. This may need to be adjusted if vessel conditions change.

Diameters between 15.5″ and 16″ have proven to be the best overall performing with the OXE diesel outboard.

17-21″ pitch have proven to be the best high speed.

13-18″ pitch have proven to be the best low speed heavy load performing.

ENGINE UNDER OR OVERLOADING

NOTE! ***This may affect your warranty.***

Overloading of the engine through the installation of a propeller with too much pitch is the most common source of fuel inefficiency and engine damage. Overloading can also result from the use of a propeller with too large a diameter, but this is less common. Overloading can result in severe engine damage. It is important to remember that, with a diesel engine, it is the load and not the RPM that determines fuel consumption. Therefore, continuous overloaded operation results in an unnecessarily high fuel consumption, increased maintenance costs and ***void warranty***.

- If the propeller blades have too much pitch, the engine will operate below the normal range at full throttle.
- If the propeller blades have too little pitch, the engine will operate above its normal rpm range and damage from over-speeding can occur.

THEORETICAL SPEED CALCULATIONS

(RPM / Gear Ratio) × Propeller pitch) / 1396) - slip % = theoretical speed in Knots.

Example

(4200/1.73) × 21) / 1396) – 10 % = 32.9 knots

In this example the engine is operating at 4,200rpm. The gear ratio is 1.73:1 reducing the propeller shaft speed to 2,428rpm.

With a pitch of 21", the theoretical speed is 36.5knots. Minus 10% slip = 32.9knots

GENERAL PROPELLER AND APPLICATION TABLE

Application	Vessel type	Setting	Diameter	Pitch	Number of blades
- Light weight - High speed - Planing	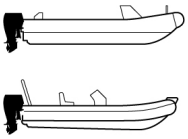	High speed	15 - 16”	17 - 26”	3/4
- Medium weight - Intermediet speed - Planing or displacement	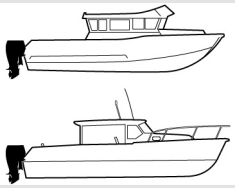	High speed or high torque	15 -17”	15-21”	3/4/5
- Heavy weight - Low speed - Displacement	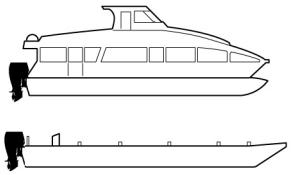 Pontoon/Barge	High torque	15.5-17”	11-17”	3/4/5

NOTE! Contact the aftersales team if you would like a list of proven propellers that have been tried and tested and may match your application.

IMPORTANT

During commissioning it is important to test the vessel in a fully loaded condition.

PROPELLER INSTALLATION

NOTE! In twin, or more installations, one propeller should be for right-hand rotation and the other one should be for left-hand rotation. Both should be of the same brand, diameter and have the same pitch. ***See Fig. 9 to 11 on previous pages***.

WARNING

Rotating propellers can cause serious injury or death. Never operate the OXE diesel engine out of the water with a propeller installed. Before installing or removing a propeller place the drive unit in neutral and engage the kill cord stop switch to prevent the engine from starting.

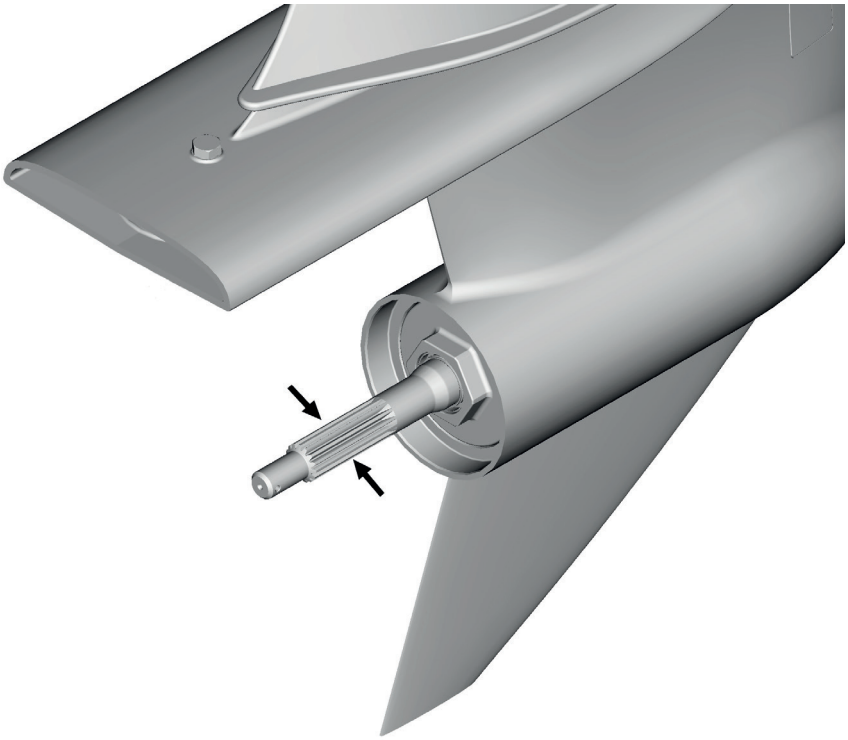

Fig. 13 *Propeller shaft*

1. Apply marine grease according to table ***Recommended Fluids and Grease*** to the propeller shaft before installing the propeller, as this will aid future removal and corrosion resistance.

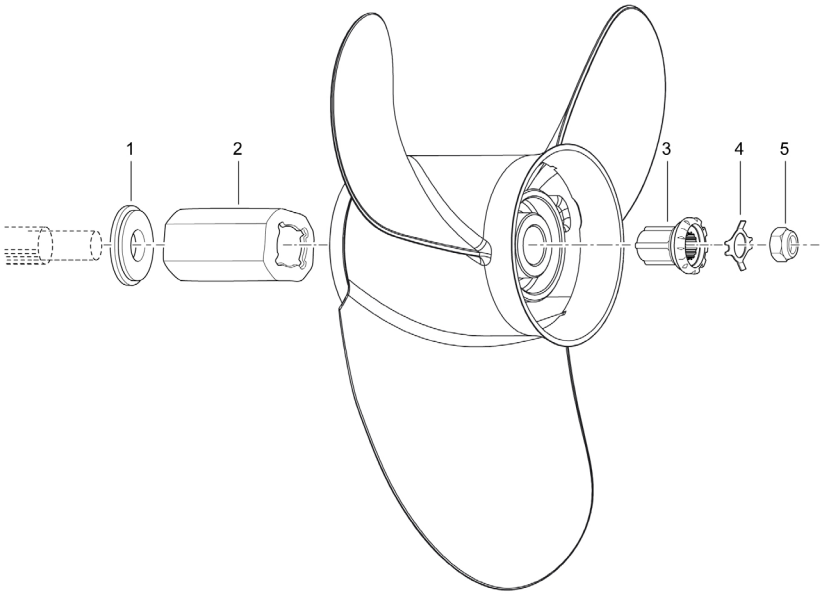

2. Install the thrust washer ***(1)***, the propeller hub ***(2)*** and the propeller on the propeller shaft.

NOTE! Be sure to install the thrust washer before installing the propeller, otherwise the lower case and propeller boss could be damaged.

WARNING

Do not use your hand to hold the propeller when loosening or tightening the propeller nut. Secure the propeller with a wooden block according to illustration below.

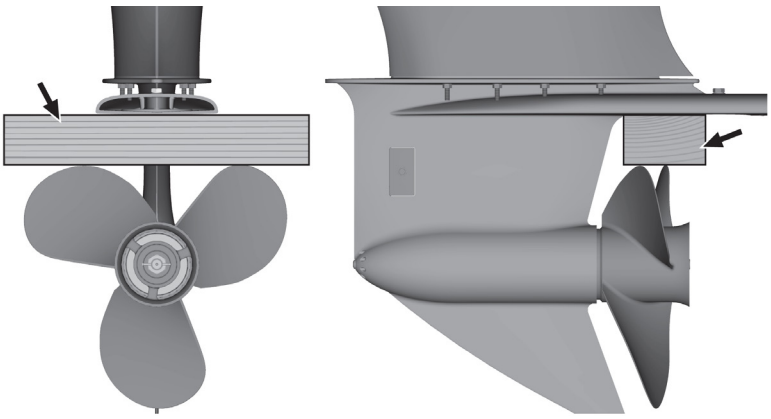

3. Install the hub adapter ***(3)***.

4. Place the locknut retainer ***(4)*** over the raised pins on the drive sleeve adapter ***(3)***.

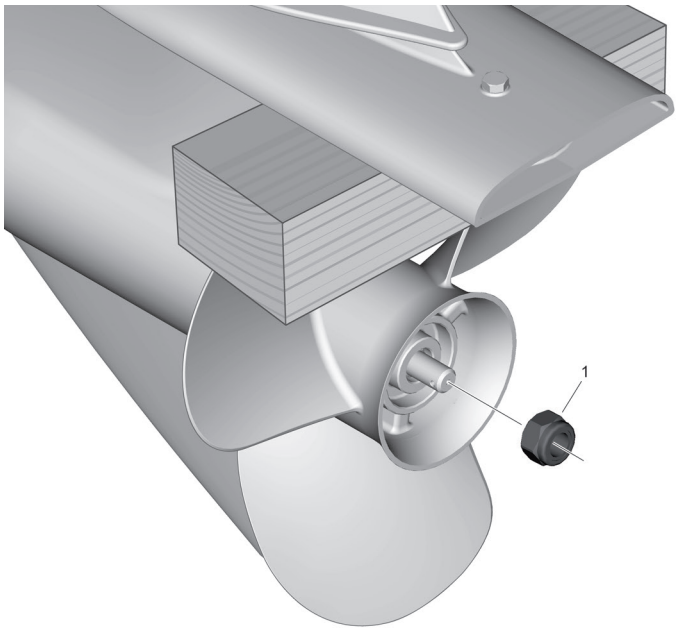

5. Tighten the propeller Nyloc-nut ***(1)*** to the specified torque.
Propeller nut tightening torque: 75.0 Nm (55 ft-lb).

6. Align the propeller nut with the propeller shaft cotter pin hole.

NOTE! If the propeller nut does not align with the propeller shaft cotter pin hole after tightening to the specified torque, tighten the nut further to align it with the hole.

7a. Secure the locknut by bending the locknut retainer tabs up against the flats of the Nyloc-nut.

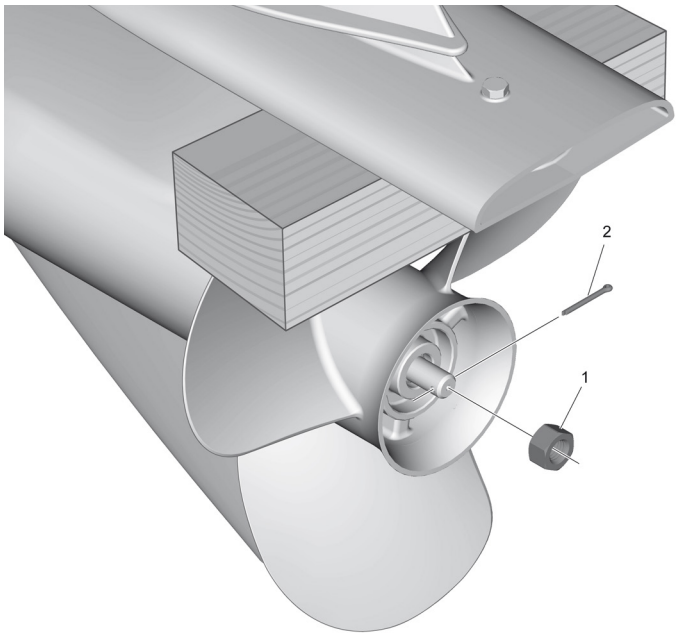

7b. Insert a cotter pin ***(2)*** in the hole and bend the cotter pin ends securely.

NOTE! Some models use a retainer ***(1)*** and a castellated nut ***(2)*** combined with a cotter pin ***(3)***.

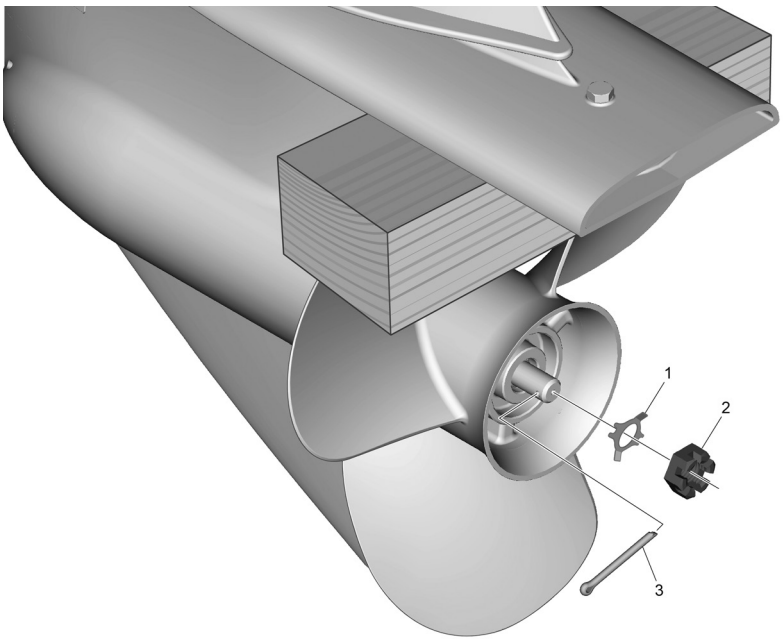

8. Tighten the propeller nut to ***75.0 Nm (55 ft-lb)***.

9. Ensure that the propeller is undamaged and rotates freely of the lower housing.

PROPELLER ANODE INSTALLATION

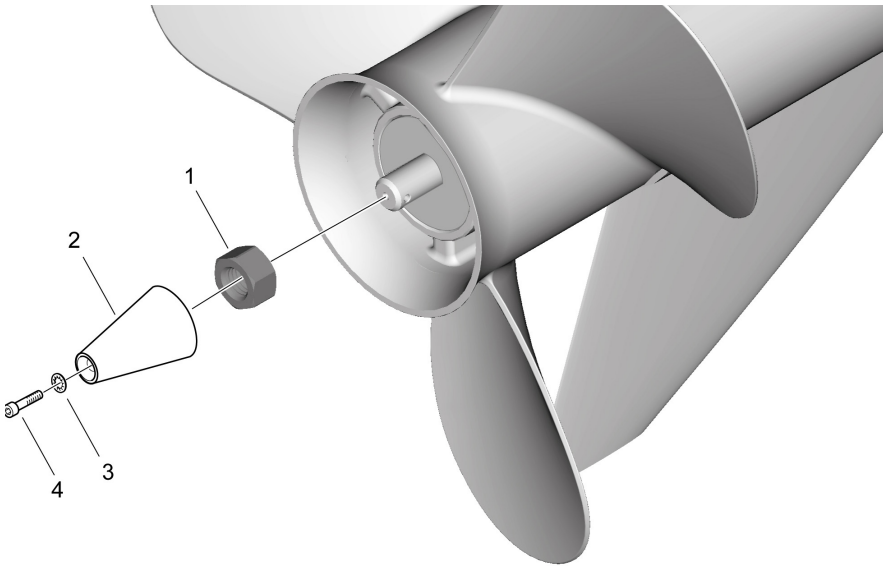

1. *Propeller nut*

2. *Propeller anode*

3. *Internal toothed washer*

4. *Allen screw*

INSTALLATION WIRING

IDENTIFICATION OF HELM HARNESS GENERATIONS

Helm harness G3

Engines with serial number ***1000800 and below*** can be used with helm harness G3 according to G3 schematics on the following pages.

Engines with serial number ***1000801 and above*** are recommended to use G4 helm harness and to be installed according to G4 schematics on the following pages.

Helm harness G4

CAUTION

Software update required!

When installing a G4 helm harness to OXE 125-200 HP with serial number ***1000800 and below***, a software update is required.

Please contact your local dealer prior to installing the engine as the ECU will need an update to be able to accept the new G4 helm harness.

WARNING

When installing the helm harness built for the OXE-diesel engine it is important not to connect any peripheral devices to the OXE internal CAN-system.

NOTE! Any peripheral equipment must be connected to the separate CAN-system (User NMEA-system).

NOTE! Connecting any peripheral equipment to the helm harness (OXE internal CAN) will ***void the warranty***.

NMEA2000, 1A (F101) FUSE

This fuse will not be pre-mounted, but supplied with the Helm Harness.

The ***NMEA2000, 1A*** fuse is powering the NMEA2000 ignition power supply in a single engine configuration.

Single Engine Configuration

NMEA2000, 1A fuse installed, no external power supply to the internal NMEA2000 bus allowed.

Multiple Engine Configuration

NMEA2000, 1A fuse removed, the internal NMEA2000 bus is powered through diodes (diodes to be installed seperately for ***G3 harness***).

USER IGNITION SIGNAL, 1A (F102) FUSE

This fuse will not be pre-mounted, but supplied with the Helm Harness.

The "User ignition signal, 1A" is designed to only drive low power applications that require an ignition signal. e.g. Relays (NOT power supply). Therefore a separate fused relay must be used to supply currents greater than 0.75 Ampere. If a relay is used, the relay signal ground and power supply must be connected directly to the battery. Fuse size: 1A

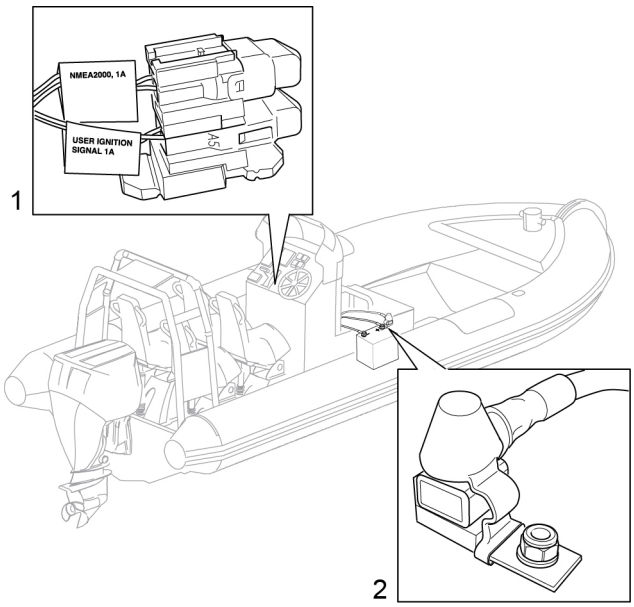

Fig. 12 *Placement in the boat*

1. *NMEA2000 Fuse 1A and User Ignition Signal Fuse 1A*
2. *Control Supply Cable Fuse 100A*

ENGINE - HELM HARNESS ENGINE CONNECTOR

1. Connect all applicable helm related devices to the helm harness (items applicable):
   - Ignition key (s)
   - Emergency Stop (s)
   - Throttle handle (s)
   - Display (s)
   - Diagnostic adaptor harness (es) (if applicable -preferred in order to perform a pre-start-up control)

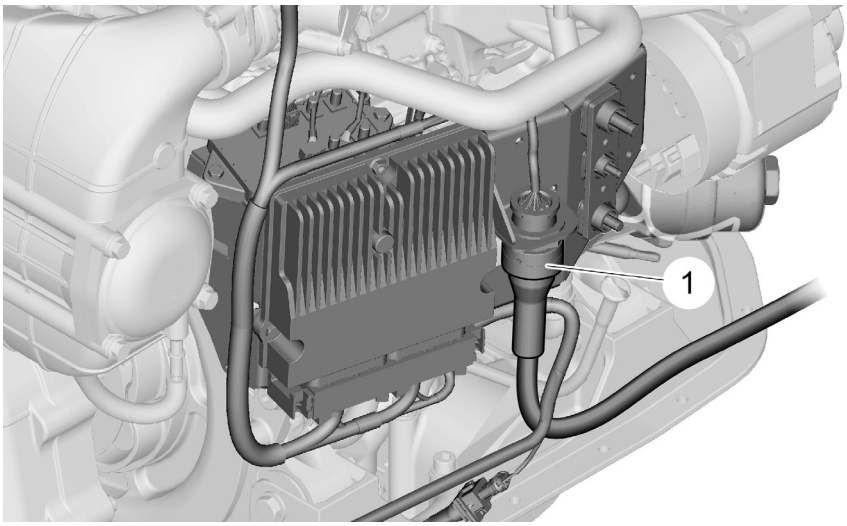

Fig. 14 *Engine connector*

2. Connect the helm harness engine connector with the engine harness boat connector ***(1)***.
3. Complete a final inspection of all connections.

12V ELECTRICAL POWER CONNECTION

1. Install a main electric power switch on the (B+) side . (See *specifications of cable length between battery and switch in the diagrams on the following pages).*

From the main batteri power switch:

2. Install the (B+) starter supply cable to the engine starter power connector. *(See layout and specifications of the cables in the engine application schematics to follow).*

3. Install the control (B+) power supply cable to the ECU & Helm power connector on the engines power cable connector terminal. *(See layout and specifications of the cables in the engine application schematics to follow).*

4. Prior to installing the ground cable – ensure that the main electric power switch and the ignition key are in the off position.

5. Connect the ground cable to the battery GND terminal and torque to specification. Connect the other end for the (B-) Ground to the engines battery power connecter terminal. Connect a common ground cable (wire size same as engine battery cables) between negative (–) terminals on all starting batteries.

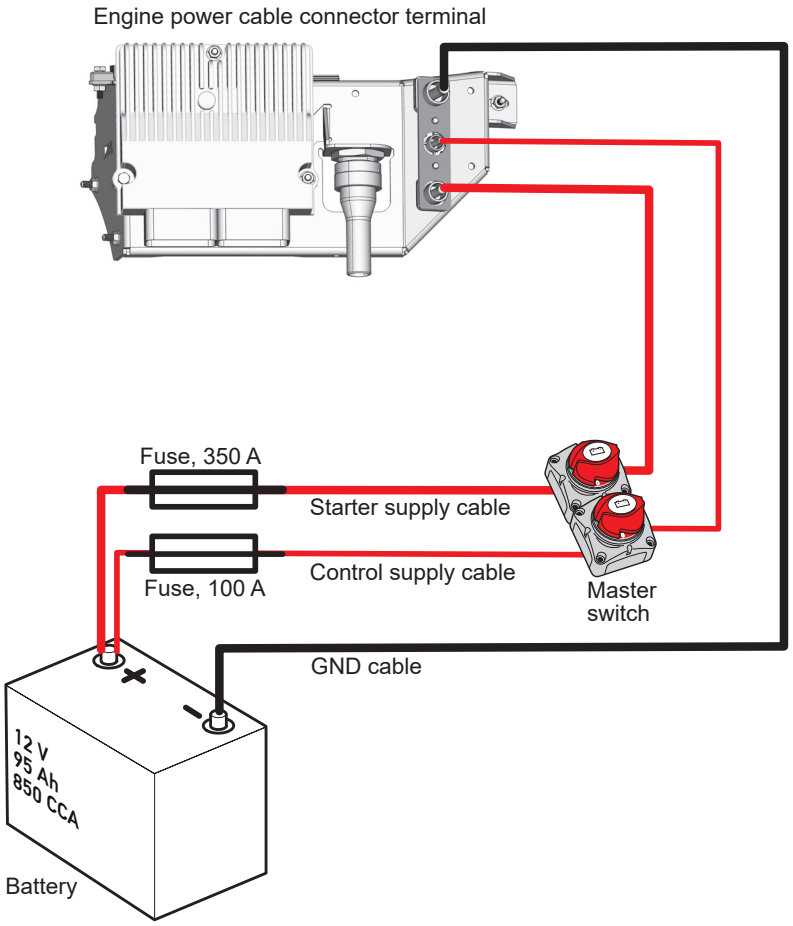

G3 - SINGLE ENGINE APPLICATION

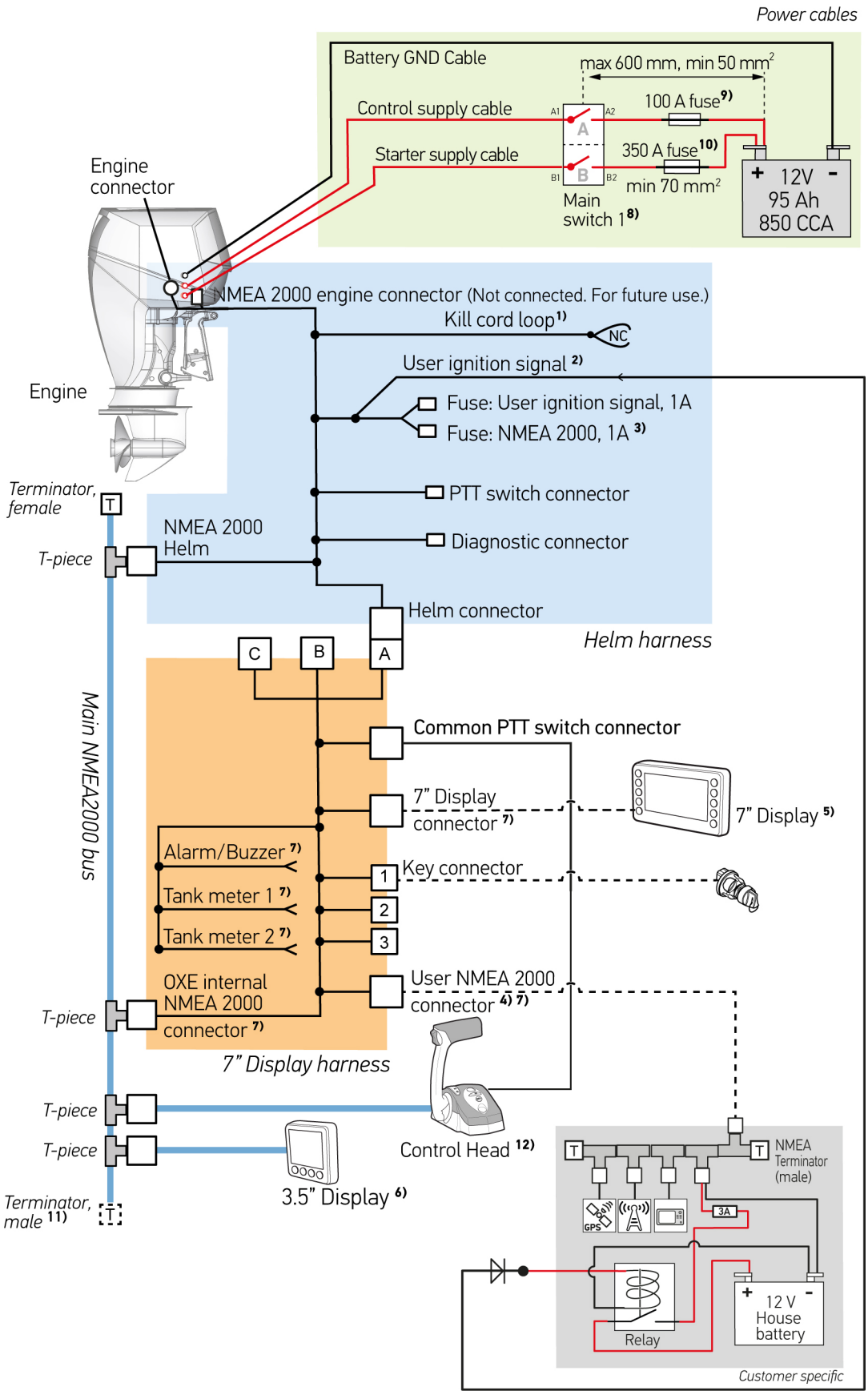

G3 - TWIN ENGINE APPLICATION

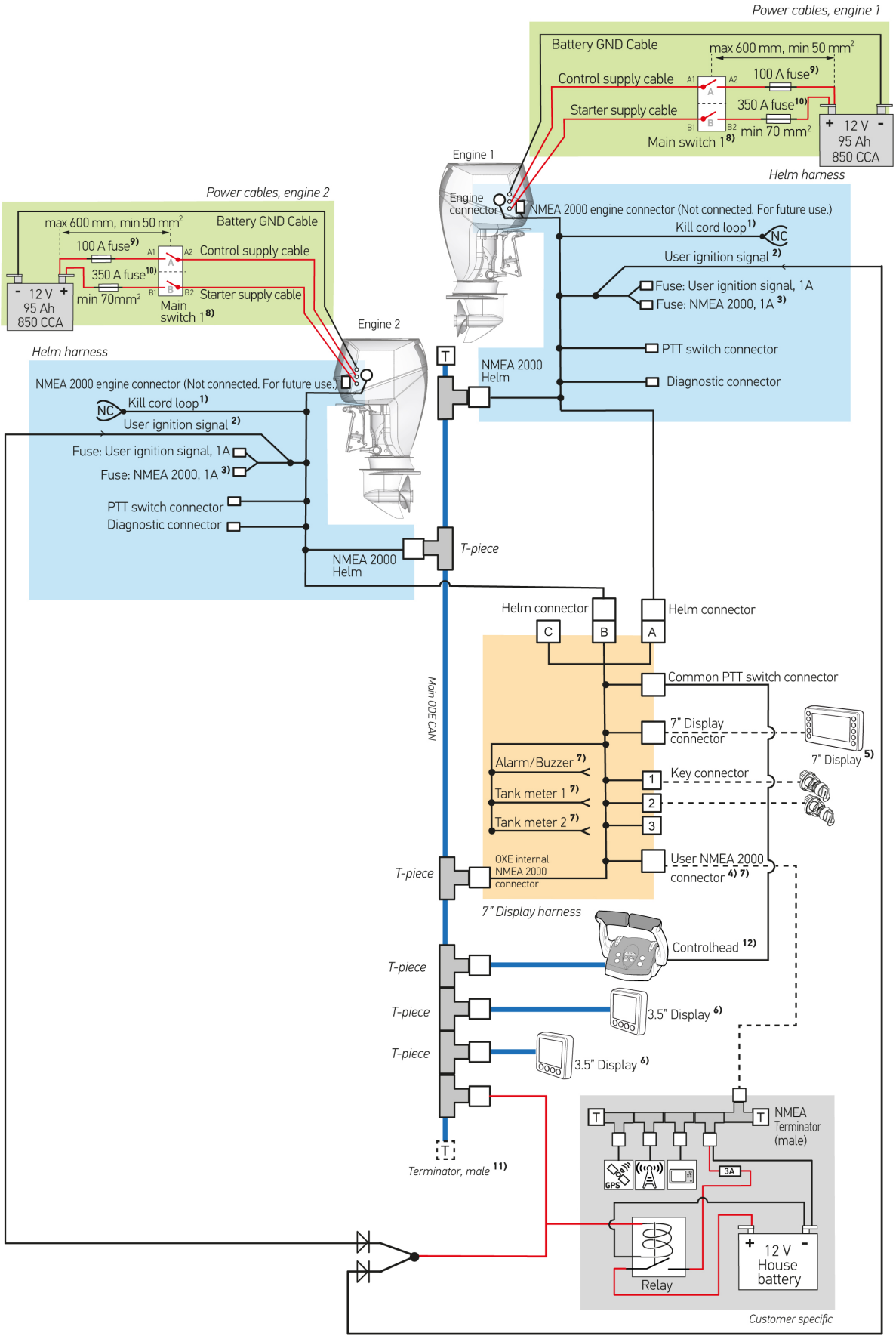

G3 - TRIPLE APPLICATION

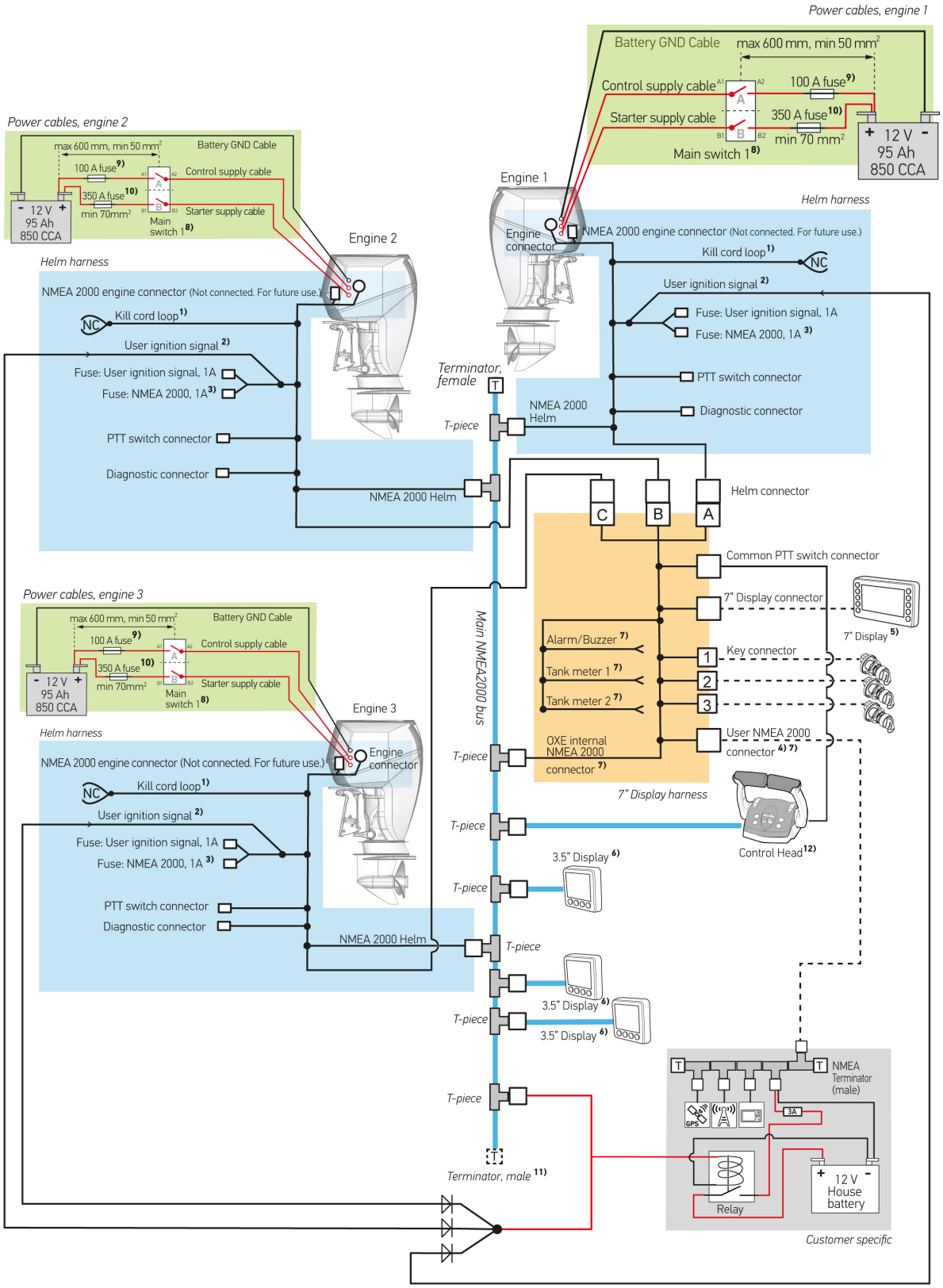

G3 - QUAD ENGINE APPLICATION

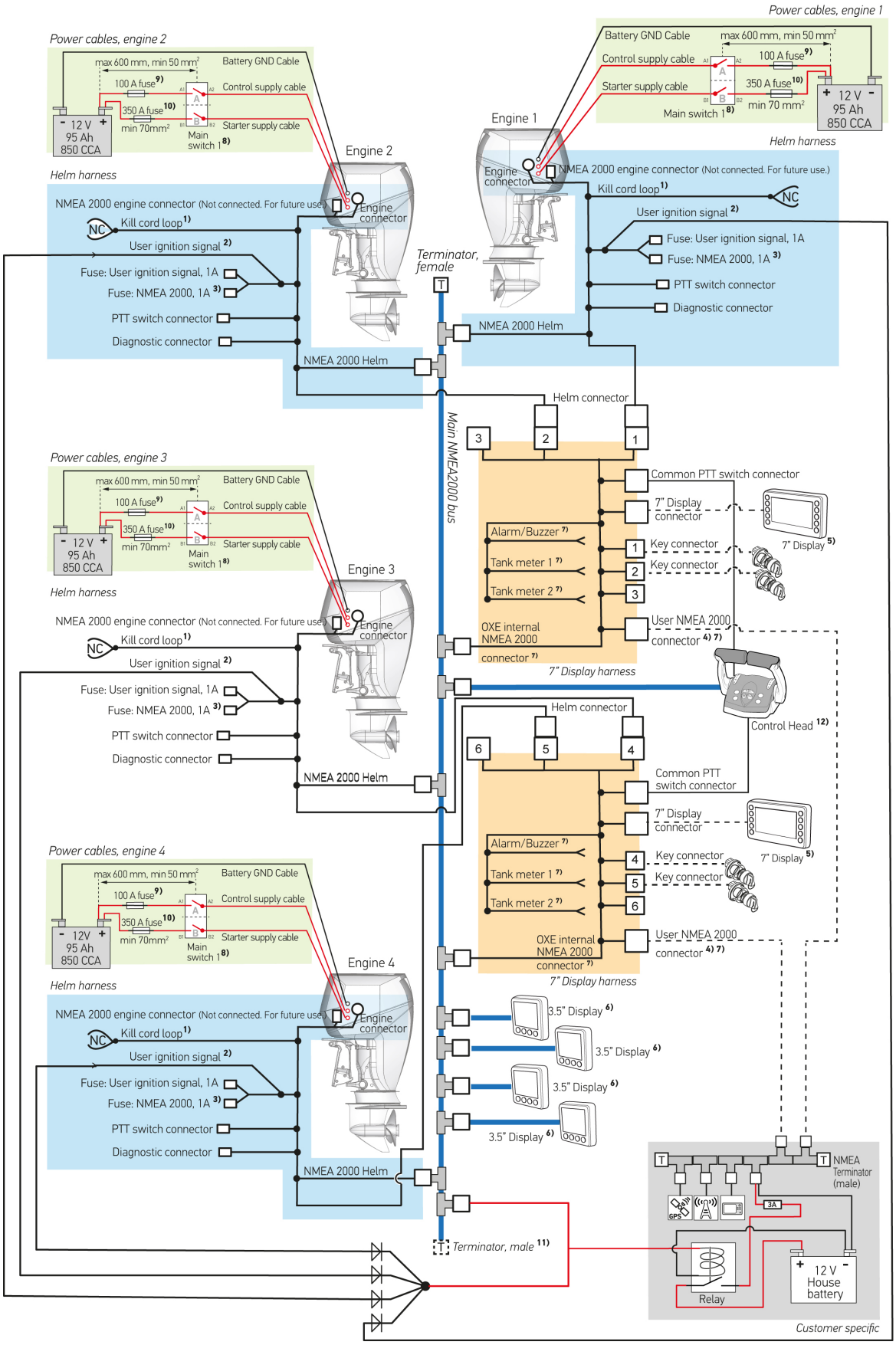

REFERENCE, INSTALLATION WIRING G3

NOTE! Only OXE Marine approved components are permitted to be connected to the internal CAN-Bus.

1) Open loop at delivery.
In order to activate ignition, e.g. start the engine, the kill cord switch must be connected.
Open loop = engine shut-off.

2) If used, the user ignition signal 1A fuse must be installed and the GND cable must be wired to the engine's ground battery.

3) ATO 1A fuse, used only in single engine application. No other supply to the main NMEA2000 CAN-bus is permitted!

4) Use this NMEA2000 connector to connect your external equipment such as GPS, VHF, plotter etc. to the 7" display.
If a 3,5" display is used, a completely separate NMEA2000 bus must be used.

5) The 7" display is optional and replaces the 3,5" display.
One display per engine, up to three engines.

6) The 3.5" display is standard equipment, one display per engine.

7) Used in combination with 7" display only.

8) Use two separate single channel (SPST) switches or one dual-channel switch.

9) Use a 100A fuse on the control supply cable.

10) Use a 350A fuse on the starter supply cable.

11) Connection point for Dual Station application. Refer to section ***Dual station*** for different OXE outboard applications.

12) Refer to section ***Controlhead throttle and shift behavior***.

Color codes, cable harness

	Helm harness
	Common I/O harness
	Power cables
	Customer specific

G4 - SINGLE ENGINE APPLICATION

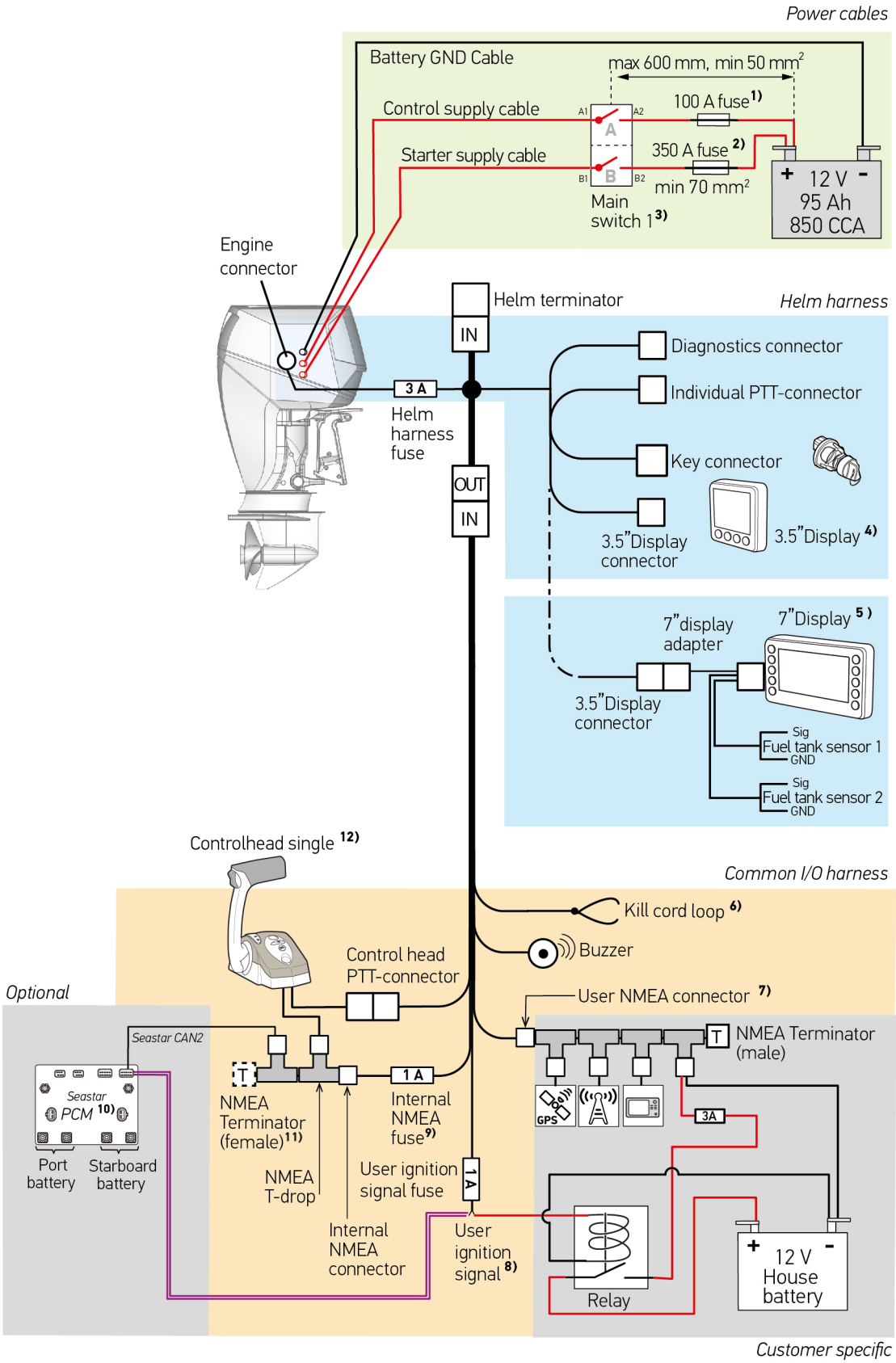

G4 - TWIN ENGINE APPLICATION

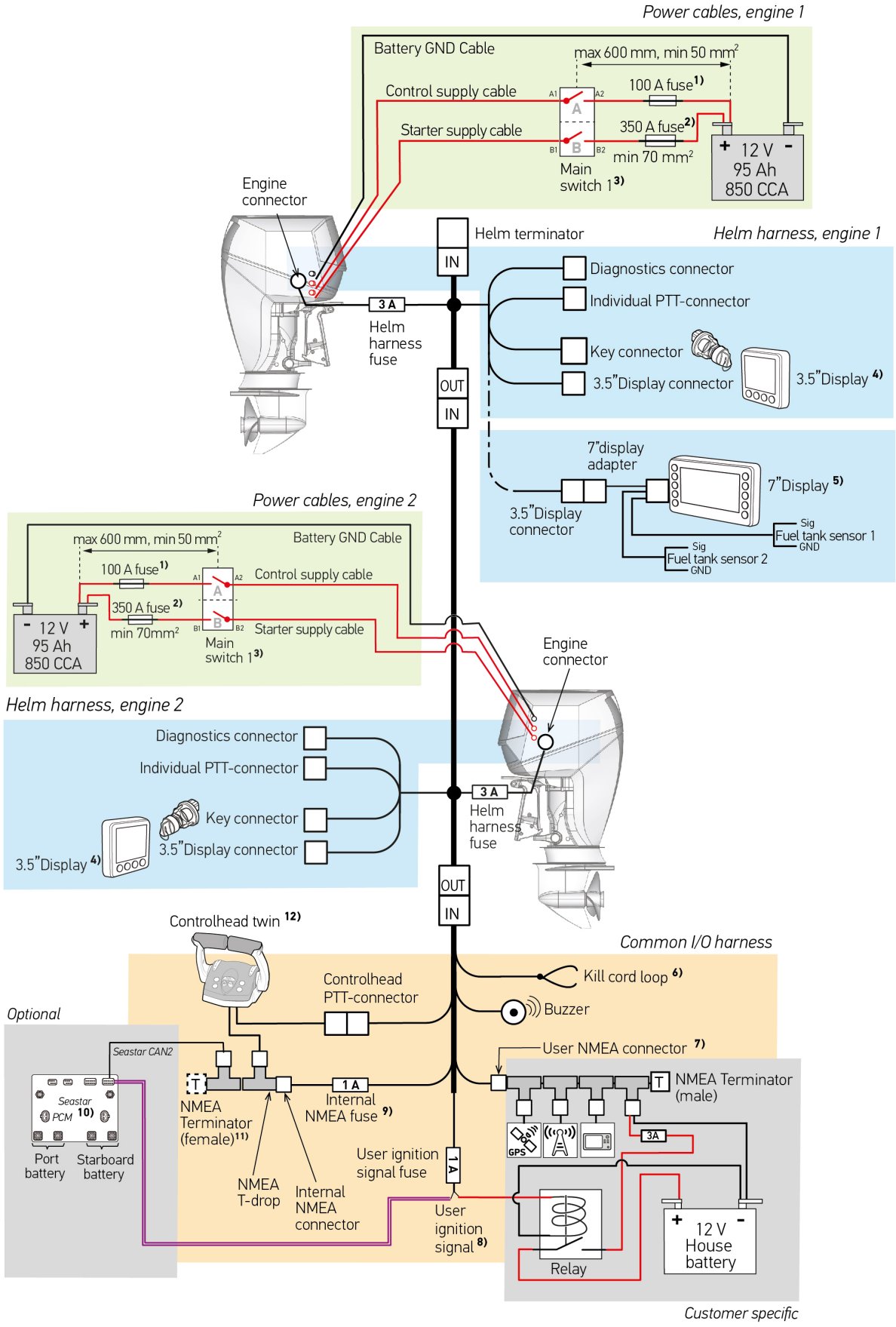

G4 - TRIPLE ENGINE APPLICATION

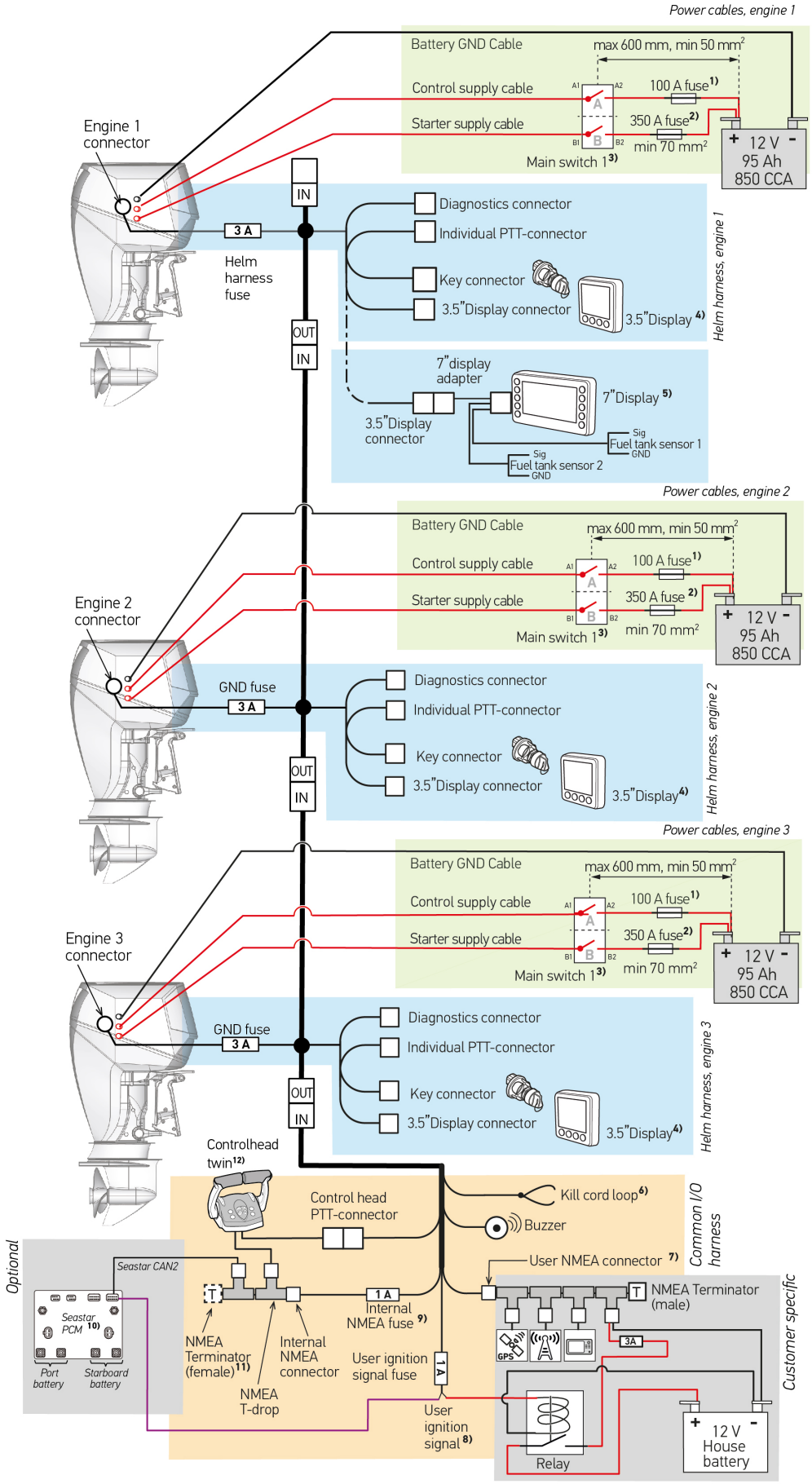

G4 - QUAD ENGINE APPLICATION

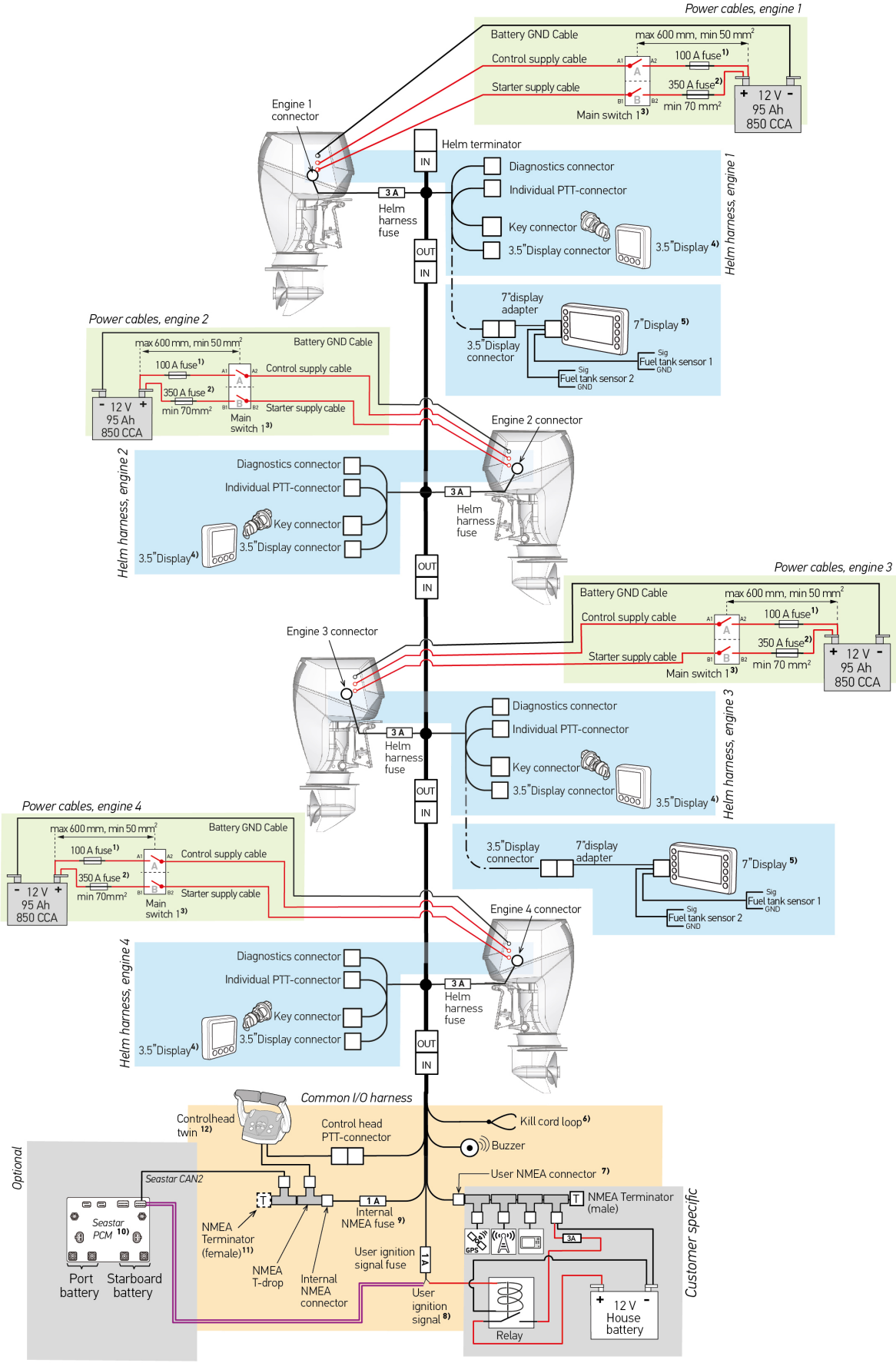

REFERENCE, INSTALLATION WIRING G4

NOTE! Only OXE Marine approved components are permitted to be connected to the internal CAN-Bus.

1) Use a 100A fuse on the control supply cable.

2) Use a 350A fuse on the starter supply cable.

3) Use two separate single channel switches or one dual-channel switch.

4) The 3.5" display is standard equipment (one display per engine).

5) The 7" display is optional and replaces the 3,5" display(s). One 7" display is needed in a single, dual or triple engine application and two 7" displays are required in the quad engine application.

6) Open wiring loop at delivery.
The kill cord loop at the helm harness must be closed to enable fuel injection/engine start.
Open loop = fuel injection disabled.
Closed loop = fuel injection enabled.

7) Use the USER NMEA2000 connector to connect your external equipment such as GPS, VHF, plotter etc.

8) **CAUTION!**

If used, the *user ignition signal* should never power user applications directly, but always control a relay that powers the user application, such as *User NMEA*, lights, etc.

To enable the *user ignition signal* a max. 1A fuse must be installed in the *user ignition signal fuse 1A socket*.

9) The Internal NMEA fuse is not to be installed if the CAN-bus is supplied by another source, e. g. via Seastar PCM.

10) Refer to the Seastar Manual for further information.

11) Connection point for Dual Station application. Refer to section ***Dual Station*** for different OXE outboard applications.

12) Refer to section ***Controlhead throttle and shift behavior.***

NOTE! A software update is required when installing a G4 helm harness to OXE 125-200 with engine serial number below #1000800.

Please contact your local dealer prior to installing the engine, the ECU will need an update to be able to accept the new G4 helm harness.

Color codes, cable harness

	Helm harness
	Common I/O harness
	Power cables
	Customer specific

DUAL STATION

In Dual Station application the backbone can be extended max. 10 m.
Only second station controlhead (single 30-0116-712, twin 30-0116-713) and 3.5" displays are supported.

Single engine application

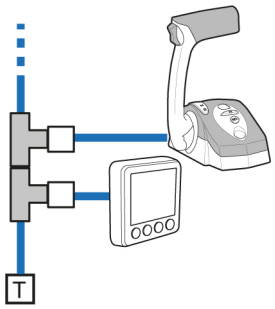

Twin engine application

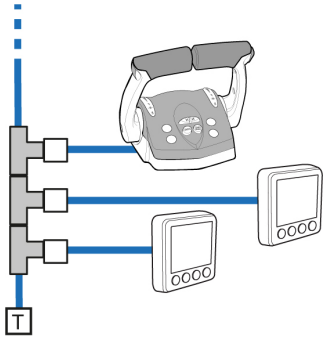

Triple engine application

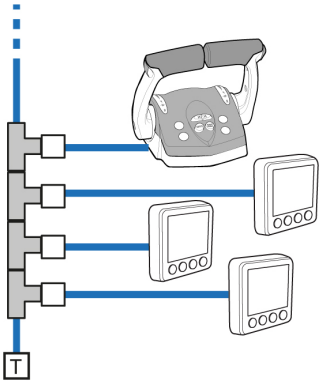

Quad engine application

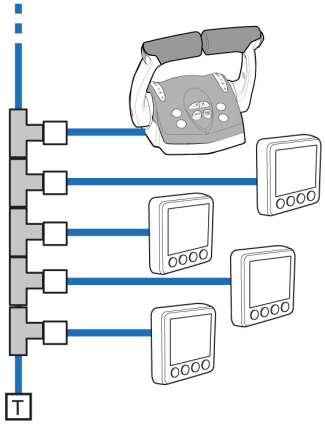

CONTROLHEAD THROTTLE AND SHIFT BEHAVIOR

In single and twin outboard applications, the corresponding controlhead lever controls the outboard.

Triple outboard application

The center outboard receives control commands from both port and Starboard engines including gear selection and throttle request as follows:

- Neutral gear unless both port and starboard are requesting the same gear, then that gear is also requested for center outboard.
- The center engine follows the lowest throttle request of the port or starboard engine.

The center outboard is reporting control faults to the port outboard.

Quad outboard application

The port and port center outboards are paired together and controlled by the port controlhead lever. The same applies to the starboard outboard pair. The center outboards are reporting any control fault to their corresponding outer outboard.

ELECTRICAL COMPONENTS

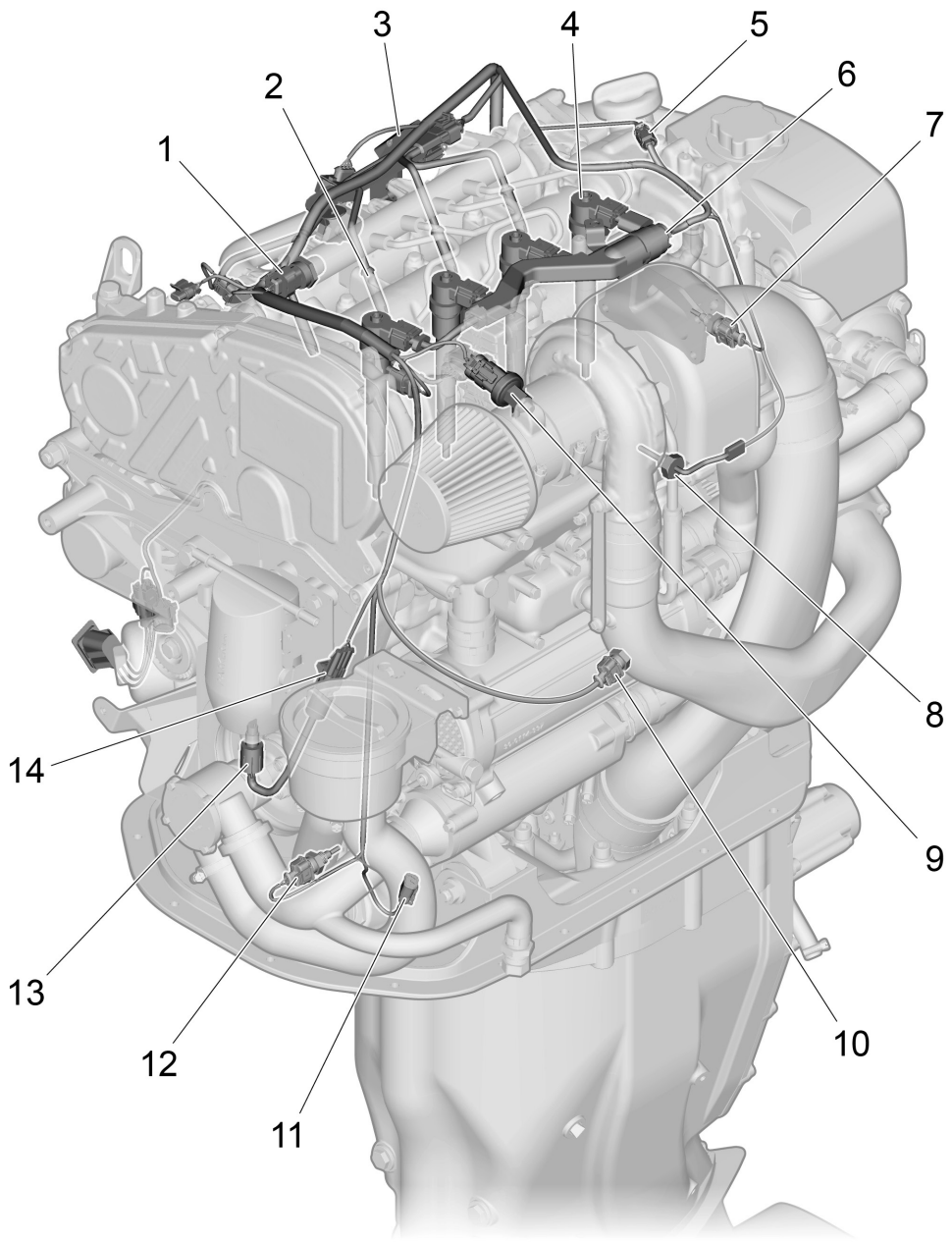

1. *Fuel rail pressure sensor connector*
2. *Glow plug (4 pcs)*
3. *Glow plug harness connector*
4. *Injector (4 pcs)*
5. *Exhaust gas temperature sensor connector*
6. *Injector harness connector*
7. *Engine coolant temperature sensor/connector*
8. *Exhaust gas temperature sensor*
9. *Air filter restriction sensor*
10. *Compressor-outlet-temperature sensor (175/200 HP engine only)*
11. *Gearbox oil pressure switch connector*
12. *Engine oil temperature sensor*
13. *Water-in-fuel sensor*
14. *Water-in-fuel sensor connector*

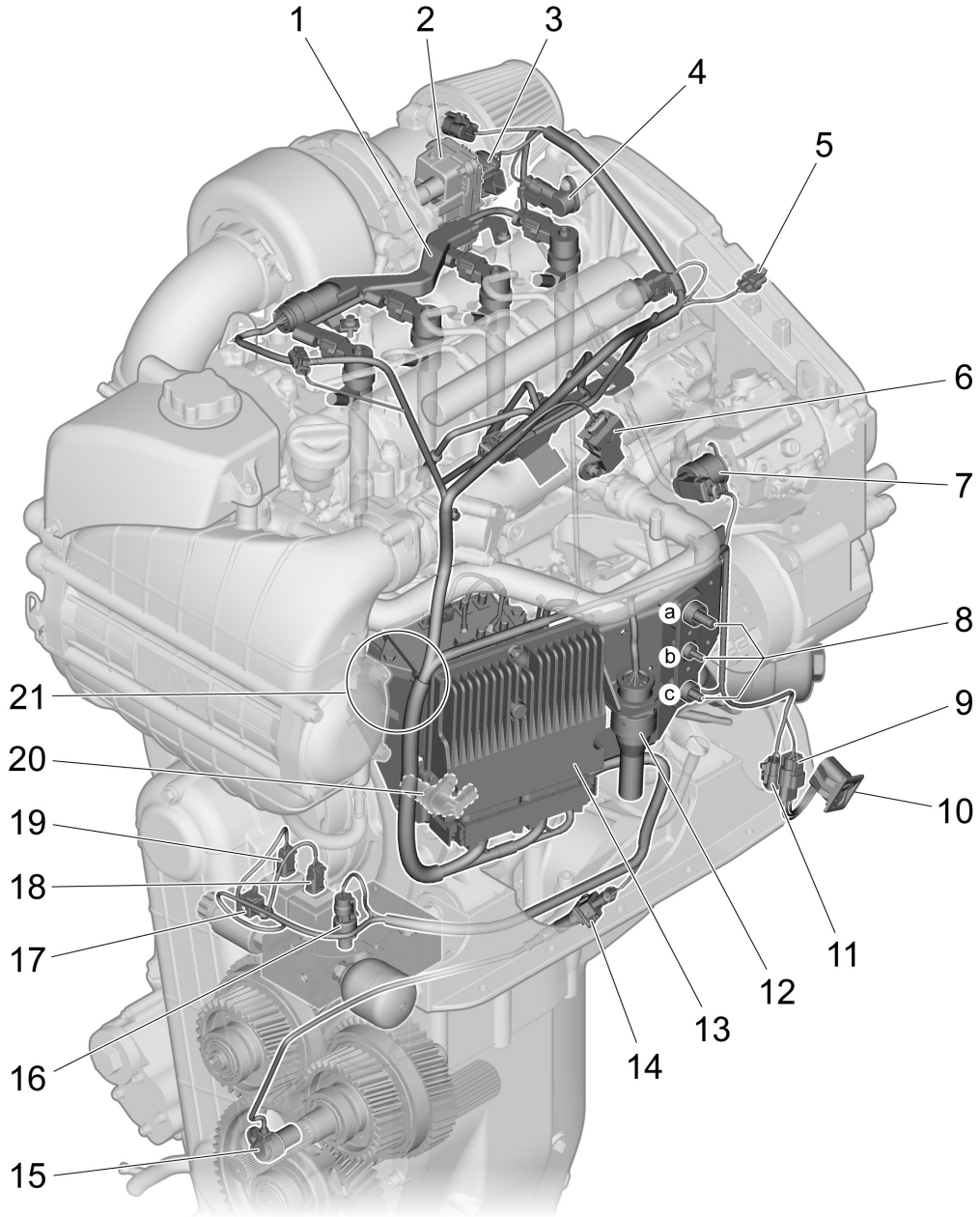

1. *Injector harness*

2. *Turbo actuator*

3. *Turbo actuator connector*

4. *Camshaft position sensor*

5. *Fuel Supply Modul (FSM) connector*

6. *Temperature and air mass meter*

7. *Fuel pressure control valve*

8. *Power cable connector*
- *a) GND*
- *b) ECU and helm power*
- *c) Engine starter power*

9. *PTT cowl connector*

10. *PTT switch*

11. *PTT sensor connector*

12. *Engine to helm harness connector*

13. *ECU*

14. *Gearbox output speed sensor connector*

15. *Gearbox output speed sensor*

16. *Gearbox oil pressure sensor*

17. *Trolling valve*

18. *Starboard gear coil*

19. *Port gear coil*

20. *Crankshaft position sensor*

21. *Swirl valve and glow module, hidden behind ECU*

ENGINE SETUP

NOTE! OXE diesel outboards are delivered standard as a single engine installation with clockwise rotation. No ENGINE SETUP is required.

SETTING ENGINE ROTATION, LOCATION AND NUMBER OF ENGINES

Connect to the engine using ODT - the OXE Diagnostic Tool.
For assistance and help, please refer to your training material or contact the Technical support team.

Setting Engine rotation

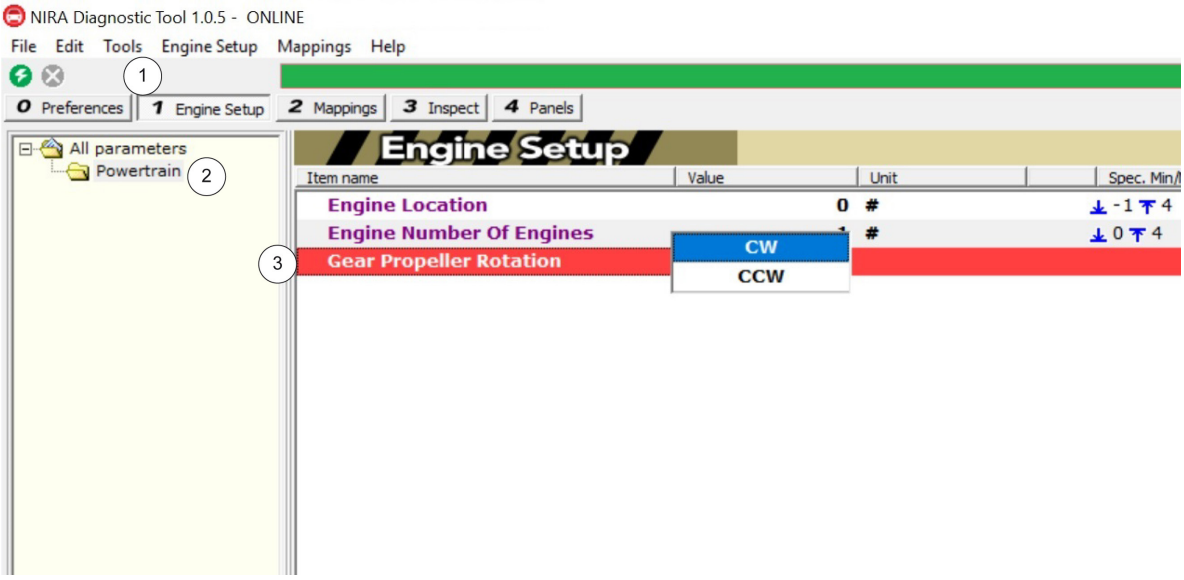

1. Go to tab 1 ***Engine Setup***.
2. Choose folder ***Powertrain***.
3. Double tap and enter engine rotations ***Gear Propeller Rotation***, finalize ***acknowledge*** by pressing ***Enter***.
   CW = Right hand rotation
   CCW = Left hand rotation

NOTE! Please refer to ***Mounting the OXE outboard*** in the Installation Manual for further info regarding rotation option in multiple engine installation.

Setting Engine Location

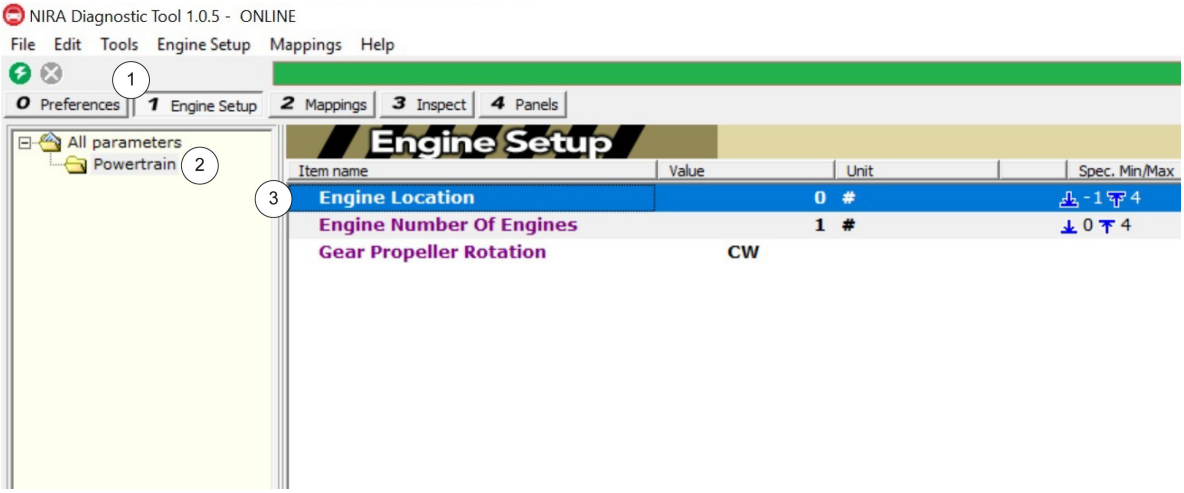

1. Go to tab 1 ***Engine Setup***.
2. Choose folder ***Powertrain***.
3. Double tap and enter ***Engine Location***, acknowledge by pressing ***Enter***.

	Engine Location				
Engine No. of Engines	Port	Port Center	Center	Starboard Center	Starboard
1	0	-	-	-	-
2	0	-	-	-	1
3	0	-	1	-	2
4	0	1	-	2	3

Setting Number of Engines

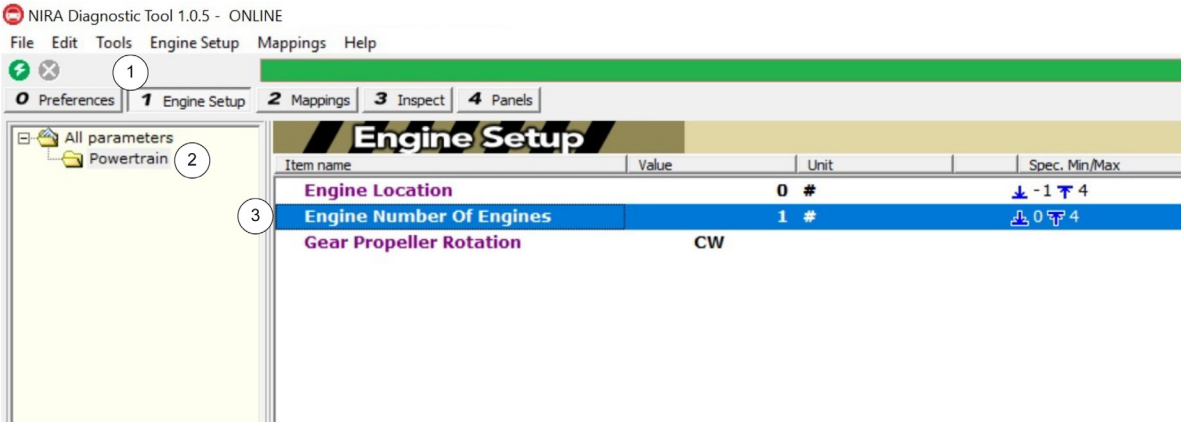

1. Go to tab 1 ***Engine Setup***.
2. Choose folder ***Powertrain***.
3. Double tap and enter ***Engine Number of engines***, finalize ***acknowledge*** by pressing ***Enter***.

Setting up helm harness generation G3/G4

NOTE! This setting is only avalible in software ***version I3m R09*** or higher.

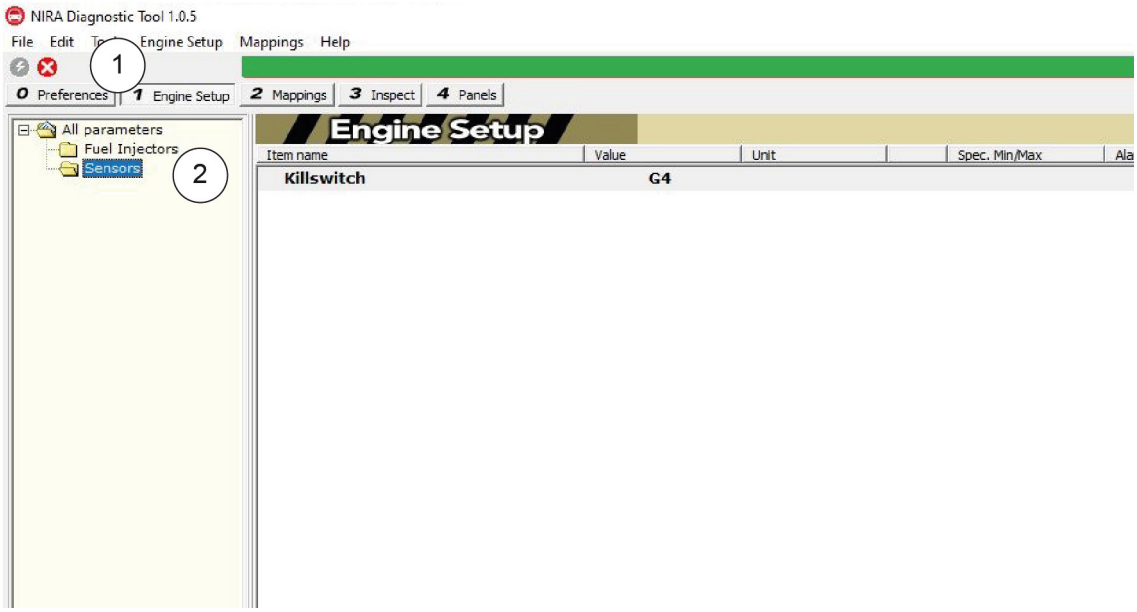

1. Go to tab 1 ***Engine Setup***.
2. Choose folder ***Sensors***.

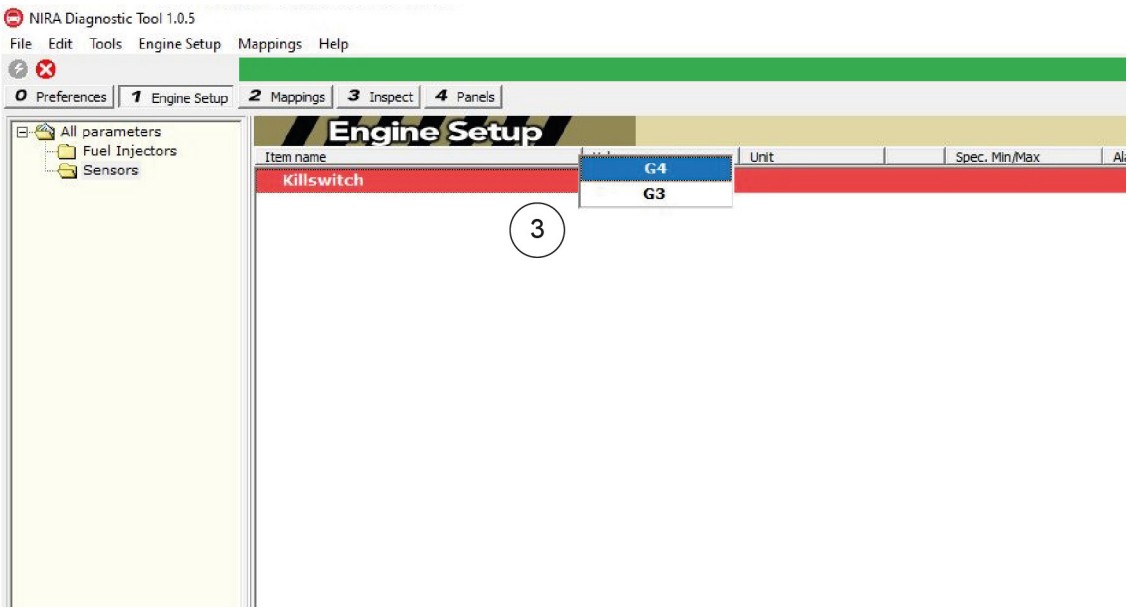

3. Double tap and enter ***Killswitch***, finalize ***acknowledge*** by pressing ***Enter.***
   G3 = Helm harness G3
   G4 = Helm harness G4

START/TEST RUNNING ON LAND

It is possible to test run the OXE outboard on land.

Fill up a container with a sufficient amount of water. Lower the front water intake point into the water and start the engine.

An alternative is to connect a flexible hose ***(2)*** to the seawater strainer connector ***(1)***.

Connect the other end of the hose to a fresh water supply. Open the fresh water supply, then start the engine.

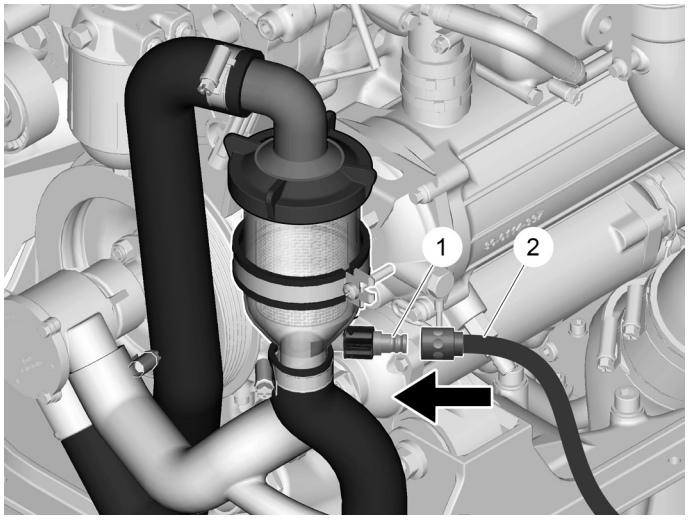

OPTIONS

CABIN HEATER INSTALLATION

CAUTION

When installing on V2 engine versions, contact *your local dealer* for information.

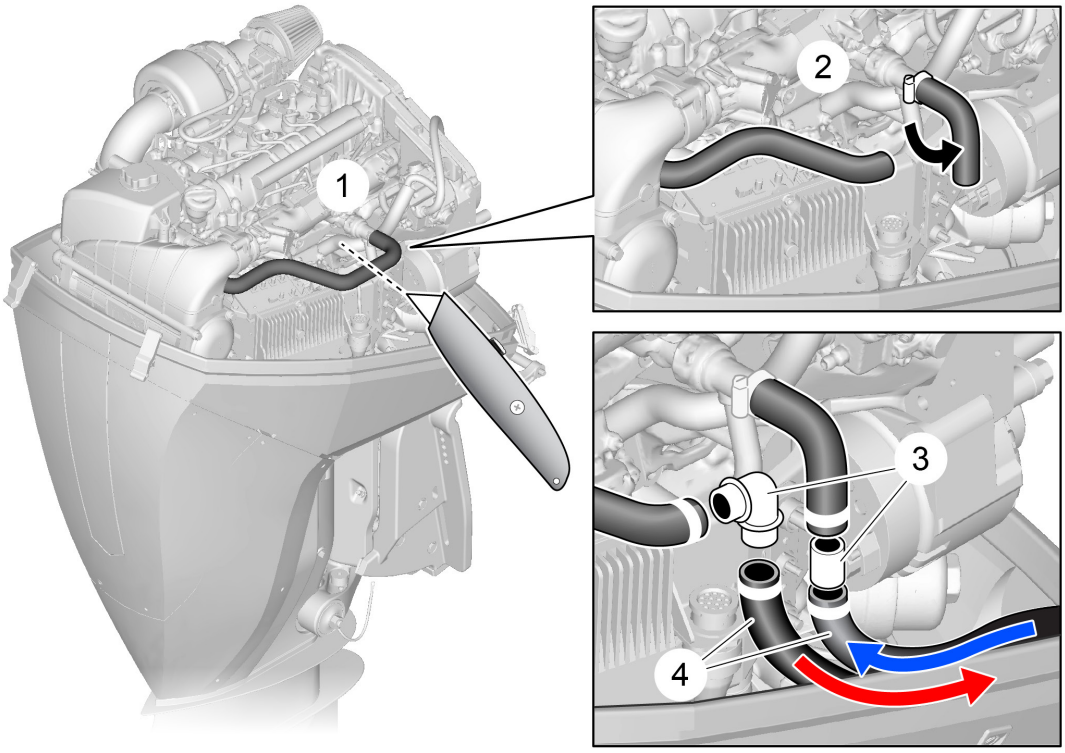

1. Locate the coolant hose ***(1)*** on the engines starboard side, next to the crankcase ventilation and above the ECU. Cut hose in this area as illustrated in the diagram.
2. Fold down the coolant return hose ***(2)***.
3. Attach coolant hose, ***inner diam. 23 mm (0.905 in)***, to each end of the hose with connectors ***(3)***. Notice the direction of the coolant flow.
4. Route the additional coolant hoses ***(4)*** thru the prepared holes in the rubber detail located in the front of the cowling.
5. Connect hoses to a marine heater of your choice.

   NOTE! It is possible to block the circulation with a valve at the heater unit if cool air is needed.

   NOTE! Install an air bleed valve in the heater unit circuit to ensure air is bled free. Recheck every time the engine coolant is changed.

   NOTE! Ensure that the expansion tank remains in the highest point of the cooling system.

NOTES

EMISSION RELATED INSTALLATION INSTRUCTIONS (US only)

Failing to follow these instructions when installing a certified engine in a vessel violates federal law **(40CFR1068.105(b))**, subject to fines or other penalties as described in the **Clean Air Act**.

To sample exhaust emission from the engine, fit an adapter at the exhaust pipe. An exhaust gas analysis instrument can then be connected to perform emission measurement.

This engine is **EPA Tier 3** compliant and canbe used onUS flagged vessels. Tosupport US registered vessels to operate internationally, this marine engine is also certified to **IMO Annex VI Tier II** standards, and may therefore be limited to use on new and/or non exempt vessels that meet any of the following criteria:

1. Recreational vessels <24 meters in length under **Annex VI Regulation 13.5.2.1**;
2. Recreational vessels of ≥24 m and with gross tons <500, and a keel laid date <January1, 2021, per **Annex VI Regulation 13.5.2.3**.
3. Vessels with a Tier III exemption for combined nameplate of diesel engine propulsion power <750 kW due to ships design or construction limitations under **Annex VI Regulation 13.5.2.2**. **NOTE that to use this exemption, you as a boatbuilder must seek prior approval with EPA**.
   Contact EPA at **complianceinfo@epa.gov**.

If you install the engine in a way that makes the engine's emission control information label hard to read during normal engine maintenance, you must place a duplicate label on the vesel, as described in **40 CFR1068.105**.
Contact **info@oxemarine.com** for a duplicate label.

DELIVERY AND WARRANTY REGISTRATION

Vessel		
Make/model		
Hull number		
Length/widtht/weight		
Location		
Speed information *Max and Cruise @rpm*		
Propeller selection *make, model, size, diameter* *Mandatory info.*		
Additional information:		

Engine serial number/s		**Engine position (e. g. PORT)**
#1 Engine		
#2 Engine		
#3 Engine		
# 4 Engine		

End-user informed and given training in the following	
End-user trained in operation of the vessel and OXE diesel outboard.	
End-user trained in daily checkpoints and maintenance procedures.	
End-user received necessary manuals, Service book etc	

Signing	
Harbor acceptance test, Sea acceptance twest and Delivery approved by/Inspector signature _____ _____ *Name of signee*	*Commissioning/Warranty registration agent signature* _____ _____ *Name of signee*
Distributor name and address *Telephone or email.*	*Dealer name and address* *Telephone or email.*
Date	*Date*

This form (all 4 pages) has been submitted to OXE Marine by:_____Date:_____

Please fill out this form and send it to your local dealer for submission to OXE Marine AB in order for warranty to be registered and valid.

HARBOR ACCEPTANCE CHECKLIST (HAT)

Refer to Installation Manual (ODM1003) for further instructions

Installation checklist		
General visional inspection for damages to the OXE outboard and the supplied accessories		
Steering installation and function, general overlook according to supplier manual. *Mechanical* ☐ *Electrical* ☐ *Hydraulic* ☐ *Make:*_____ *Model:*_____		
External fuel pump and filter installed according to manual - Prefilter must beinstalled before exterrnal pump		
Fuel tank capacity - 100 L minimum		*L*
Fuel-lines ID (Feed/Return) 10 mm minimum	*mm*	*mm*
Distance between fuel tank and extenal fuel pump		*mm*
Battery Size Ah		*Ah*
ECU and starter fuse 100 A/350 A installed	*ECU 100A*	*Starter 350A*
Battery Cold Cranking Amps (CCA)/Marine Cranking Amps (MCA)	*CCA*	*MCA*
Battery cable installation/routing/main switch		
Battery(s) fully charged/secured/connections tight (hex nuts & lock-washers used)		
Fuel line/connections properly installed (hoses free from any moving parts)		
Clearance around the engine, verify full steering movement without interference		
Killcord installed/Coast key installed		
Primary belt setting	*High speed*	*High torque*
Propeller selection		
Additional information regarding installed equipment and accessories:		

Before start, check all fluid levels. Refer to installation manual for specification and qty.		
Engine coolant level		
Engine oil level - chosen oil brand and model		
Gearbox oil level - chosen oil brand and model		
Upper belt housing oil level (primary belt) - chosen oil brand and model		
Lower belt oil level (lower housing) - chosen oil brand and model		
Power trim and tilt fluid level - chosen fluid brand and model		
Air bled from fuel system		
Trim and tilt function with adequate clearance		
Throttle function/range (monitor value in display 0%-100%)		
Instrument and gauges function control		
Additional information:		

After start checklist				
Engine idle speed				*RPM*
Engine oil pressure				*KPa*
Gearbox oil pressure				*KPa*
Fuel pressure at IDLE				*MPa*
Verify seawater circulation (seawater strainer and telltale)				
Verify alternator charging voltage				*V*
Check for fuel/oil/water/exhaust leaks				
Verify gearshifting function				
Verify steering function				
Check propeller rotation in FWD gear *(Adjust rotation in ODT, see Installation Manual) CW/CCW*				
Test killcord/coast key functionality				
Test start-in-gear protection function				
Additional information:				

Pre-launch test approved by / inspector signature	*Commissioning agent signature*
_____	_____
_____	_____
Name of signee	*Name of signee*

Please fill out this form and send it to your local dealer for submission to OXE Marine AB in order for warranty to be registered and valid.

SEA TRIAL CHECKLIST (SAT)

Prepare by taking the time to read the Break-in section for the OXE diesel outboard in the installation manual before sea trialing, failing to follow the procedure could shorten the life of the OXE or void warranty.

Idle/low speed checklist	
Engine idle speed - record at the bottom of this form section. Factory set idle speed 850 rpm	RPM
Engine oil pressure	KPa
Gearbox oil pressure	KPa
Engine coolant operating temperature	°C
Voltage at idle	V
Fuel pressure at idle	MPa
Verify seawater circulation (tell-tale)	
Check for fuel/oil/water/exhaust leaks, use caution around moving parts.	
Trim function	
Steering function	

WOT/high speed Factory recommended W.O.T rpm target 4200 +/-100 rpm		
Engine oil pressure		KPa
Gearbox oil pressure		KPa
Fuel pressure at WOT		MPa
Engine Coolant operating temperature WOT		°C
Intake air temperature WOT		°C
Voltage WOT		V
Engine rpm	Idle	WOT
#1		
#2		
#3		
#4		
Maximum speed		Knot
Cruise speed/cruise rpm	Knot	RPM
Trim level at maximum speed		%
Propeller selection Make, model, material		

Sea trial condition notes

Ex: seastate, wind, ambient temp, seawater temp.

Sea trail approved by/inspector signature	Commissioning agent signature
Name of signee	Name of signee

Please fill out this form and send it to your local dealer for submission to OXE Marine AB in order for warranty to be registered and valid.

REPORT FORM

Do you have any complaints or comments about this manual?
Please, write your comments down and send a copy of the form to **info@oxemarine.com.**
We prefer if you would write in English.

From _____

_____

_____

_____

Refers to publication _____

Publication No. _____ *Issued* _____

Suggestion/reason _____

_____

_____

_____

_____

_____

_____

_____

_____

_____

_____

_____

Date _____

Name _____

OXE Marine AB
Hortensiagatan 6
SE-256 68 Helsingborg
SWEDEN
info@oxemarine.com

OXE Marine AB, Hortensiagatan 6, SE-256 68 Helsingborg, SWEDEN
+46 (0)431-37 11 30, www.oxemarine.com